MINISTRY OF HIGHER AND SECONDARY SPECIALIZED
EDUCATION OF THE REPUBLIC OF UZBEKISTAN

URGENCH STATE UNIVERSITY

CHEMICAL TECHNOLOGY FACULTY
Department of the «FOOD TECHNOLOGY»

« TECHNOLOGY PROCESSING OF OILS»
educational methodical complex

Branch of science:	**300000 – Manufacturing industry**
Area of education:	**320000 – Production technologies**
Name of the direction of education (specialty):	**5321000 - Food technology (Food Sector)**

Urganch – 2020

« APPROVED »
VICE-RECTOR FOR
ACADEMIC AFFAIRS
doc. Khodjaniyozov S.U.
«___» ____________ 2020 year

Creator:

Ruzmetova D. T. Senior Lecturer of the Department of «Food technology», PhD.T.Sc.

Reviewers:

Kurambayev Sh. R. Docent of the Department of «Food technology», DSc.T.Sc.

Salikhanova D. S. Chief Researcher of the Institute of General and Inorganic Chemistry of the Academy of Sciences of Republic of Uzbekistan, DSc.T.Sc., professor.

The working curriculum of the subject was discussed at a meeting of the Department of Food Technologies on August 26, 2020, No. 1 and recommended to the faculty council.

Chief of the department: **Ibadullayev B.M.**

The working curriculum of the subject was reviewed at the Academic Council of the Faculty of Chemistry and Technology on August 27, 2020, No. 1 and recommended to the Scientific and Methodological Council of UrSU.

Chairman of the Faculty Council: **Kurambayev Sh.R.**

THE LECTURES ON THE "TECHNOLOGY PROCESSING OF OILS" ARE BASED ON THE CURRICULUM OF 5321000 "FOOD TECHNOLOGY" (OIL AND FAT PRODUCTS) BACHELOR'S DEGREE, 18 LECTURES ARE INCLUDED IN IT.

THE LECTURES CONTAIN EXTENSIVE COVERAGE OF OIL REFINING, DEODORISATION, HYDROGENATION; PRODUCING OF HYDROGEN, MARGARINE, MAYONNAISE, SOAP, FATTY ACIDS AND GLYCERIN PRODUCTS.

THERE ARE GIVEN TECHNOLOGICAL SCHEMES AND THEIR DEFINITIONS.

CONTENT

	1- Module. Technologies of refining oils and fats	
1	**Introduction of Science.** Prospects for the development of technology for processing oils and fats. About the development of technology for processing oils and fats. Scientists' views on the technology of processing oils and fats. The importance of processing oils and fats in the national economy. Use oils without waste. Prospects for the development of technologies for processing oils and fats in the country.	
2	**Refining of oils and fats.** Cleaning methods. Requirements for refined oils and fats depending on their intended use and application. Processes used to implement certain refining methods, their classification and purpose, hydromechanical, physicochemical and mass transfer.	
3	**Hydration of oils.** Phosphatides of plants, their content in oilseeds and oils. Composition and basic properties. hydration agents and their characteristics. Technological parameters of the hydration process. Used technological schemes and devices.	
4	**Alkaline neutralization. Alkaline refining technology.** Methods for removing free fatty acids from fats and oils. The essence of the alkaline neutralization process. Calculation of alkali consumption. Preparation of an alkaline solution. Alkaline cleaning mechanism. The influence of various factors on the processing process. Waste disposal. Neutralization methods and technological modes. Soap residue and moisture loss from neutralized oil. Alkaline cleaning of cottonseed oil. Flow chart of periodic cleaning. Flow chart of continuous purification of cottonseed oil by the emulsion method.	
5	**Equipment and apparatus for alkaline refining.** Periodically activated neutralizer. Continuous turbulizing reactor. In the method of continuous cleaning of oils, various equipment and devices are used: mixers, separators, coalescers, separators, auxiliary equipment.	
6	**Adsorption cleaning.** Purpose and essence of the adsorption process. Requirements for bleaching soils. Activated bleaching soils. Flow chart for batch bleaching of oils and fats. Process flow diagram for continuous bleaching of oils and fats. Drying and bleaching equipment. Equipment for periodic drying and bleaching. Continuous vacuum drying equipment.	
7	**Deodorization of oils and fats.** The purpose and essence of the deodorization process. Description of substances emitted during deodorization. Ways to implement the process. The role of steam, vacuum, temperature. Periodic and continuous deodorization. Technological scheme and technological modes.	

	Deodorants of periodic and continuous action. Technical description of the equipment. Deodorants De-Smet. Deaerator. Drop separator.	
8	**Extraction of waxy substances.** Extraction of wax substances in oils. Low-temperature fractionation, "freezing" - the main technological method of separating paraffinic substances in oils and fats, the physicochemical nature of the process.	
2- Module. Technologies of modification of oils and fats		
9	**Hydrogenation of fats and oils.** Theory of the hydrogenation process. The essence and purpose of the hydrogenation process. Mechanism and kinetics of catalytic hydrogenation of oils. The principles of heterogeneous catalysis in the liquid phase. Effect of a catalyst on the hydrogenation reaction and activation energy. Chemical changes during the hydrogenation of fats. Selective hydrogenation of unsaturated fatty acids. The nature of the catalyst and the effect of temperature on the hydrogenation rate.	
10	**Hydrogenation catalysts for oils and fats.** Suspended and stationary catalysts, their general characteristics and conditions of use. Nickel-copper catalysts, their composition. Methods of obtaining. Features of the nickel-copper catalyst. New generation nickel catalysts. Technologies for the preparation and regeneration of catalysts. The reactor that receives carbonate salts. Basic equipment structure. Equipment for the extraction, washing and drying of powder catalysts. Micro grinder. Retort. Catalyst passport mixer.	
11	**Hydrogen production technologies** Properties of hydrogen. The main industrial methods for producing hydrogen. Hydrogen production by electrolysis of water. Electrolyzers, their structure, performance. Equipment for hydrogen production by electrolysis. Baths and filter electrolysers. Electrolyzer cell. FV-500 electrolyzer. The concept of gas tanks.	
12	**The technology of hydrogenation of fats and oils.** The device of autoclaves and salomas. Preparation and dosing of the catalyst. Passport catalyst. Purification of reusable (circulating) hydrogen in continuous and batch hydrogenation processes. Composition and properties of hydrogenated nutritive and industrial oils. Hydrogenation methods. Saturation reactors. Technological scheme of hydrogenation by oil saturation. Equipment for oil hydrogenation. Scope, functions, equipment classification. Column and autoclave reactors, gas lift, equipment for purification and drying of circulating hydrogen. Scrubbers. Safety rules when using autoclaves.	

1 MODULE. TECHNOLOGIES OF REFINING OILS AND FATS

1 – LECTURE

INTRODUCTION OF THE SCIENCE. PROSPECTS FOR THE DEVELOPMENT OF TECHNOLOGY FOR PROCESSING OILS AND FATS

Plan: About the development of technology for processing oils and fats. Scientists' views on the technology of processing oils and fats. The importance of processing oils and fats in the national economy. Use oils without waste. Prospects for the development of technologies for processing oils and fats in the country.

Key words and phrases

Oil and fat industry; Vegetable oils; Fatty acids; Raw materials; Processing of fats; Vitamins; Phosphatides; Accompanying substances

Introduction of the technology of refining and hydrogenation of fats, margarine production, mayonnaise production, fatty acids production, glycerin production and soap production.

Processing of vegetable oil is one of the leading sectors of the oil industry in the Republic of Uzbekistan. Its main raw materials are unrefined oil, salomas and soapstock, as well as its essential products are, refined oil, margarine, mayonnaise, soap and glycerin.

This subject teaches the condition of fat-and-oil industry, the structure of technological processes according to the availability of raw materials and the types of products which are produced.

Requirements for students' knowledge, skills and abilities.

Students studying this subject need to be qualified specialists in the food industry. While studying the science of oil processing, students use the knowledge of other special disciplines. At the end of the study, students should have enough theoretical and practical training and should distinguish between different technological processes and schemes. They need to have enough information about new technological schemes or processes and have the ability to logically comprehend the obtained knowledge.

The main subjects of the course are "Fundamental technological processes and devices", "Biochemistry", "Fundamentals of microbiology and biotechnology", "Chemistry of oil and oily raw materials", "Equipments of enterprise and fundamentals of design".

Fat-oil industry is one of the leading industries of the republic's food industry. Ancient time in Uzbekistan vegetable oils obtained from sesame (kunjut), flax(zig'ir), indow, safflower seeds(maxsar), cotton seeds, and seeds of field plants in small oil-presses(juvoz). The first cotton seed oil plant in Uzbekistan was built in Kokand in 1884. In 1913, there produced 57,000 tons of cottonseed oil in 30 small oil plants. Nowadays there work 22 oil processing enterprises with capacity 3 mln. t. oily seeds per year.

This industry includes processing of cotton seed oils, soybean oils, fruits and vegetables oils, as well as producing of fats for food industry and fats which is used in the field of pharmaceuticals, also margarine products, mayonnaise products, household soap, perfume soap and various other products for technical uses. The average 2.1 million. t. cottonseeds, safflower seeds, as well as soybeen, which are imported from forein countries, are annual used in the production of oils.

The republic's oil and fat industry accounts for about 40% of the total production of the food industry. Products which are manufactured at the enterprises, including cottonseed oil, are exported. Koson, Gulistan Oil Extraction Joint Venture can process up to 1,200 tonnes of cotton seeds per day, Ferghana oil-fat JV’s capacity is 840 tons per day. Kokand oil-fat joint-stock company’s capacity is 810 tons cotton seeds per day, “Kattakurgan yog-moy” joint-stock company’s capasity is 950 t cotton seeds per day. Surkhonozikovkatsanoat joint-stock company’s capasity is 800 t cotton seed per day, “Urgench yog’-moy” joint-stock company’s capasity is 800 t cotton seed per day. They are the largest enterprises in that processing network.

The "Tashkent oil and fat factory" open joint-stock company produces margarine products (annual capacity of 52.4 thousand tons) and mayonnaise (annual capacity of 2 thousand tons), 10 enterprises: Ferghana, Yangiyul, Andijan, Urgench, Kattakurgan oil – fat and other oil processing plants produce household soap (total annual capacity is 103.7 thousand tons). Fergana oil-fat JSV(joint-stock venture) produces 16,7 thousand tons of perfume soaps with different small sizes (25, 40, 100 grams) per year and produces glycerin (2,000 tons per year). Automation of technological processes at the enterprises of the sector and re-equipment with equipments of foreign firms are underway. Cooperation with Krupp, Sket (Germany), “Alfa-Laval” (Sweden), “John Braun2”, “Karver”, “Kraun” (USA), “Matssoni”, “Bollista”, Italy, Germany, Polish, Ukrainian and Russian companies is giving a good results in the technical re-equipment of the enterprises.

Raw materials and structures of oil processing. The fat has great importance in the national economy as it is also the main component of food, along with carbohydrates and proteins. The feveriness of fat is 2-2.5 times higher than carbohydrates and proteins. Oils contain linolic, linoleic and arachidonic acids (vitamin F), vitamin E, D, A, carotene (provitamin A), phosphatides, and sterins.

Oils are widely used in various fields of national economy as well as for technical purposes (soap, glycerol, olive production).

With the growth of the raw material base, the oil processing industry also grows. Oil processing technology involves several manufacturing methods, which can be seen in the following scheme.

The primary raw material of the oil processing industry is vegetable oils and animal fats. The main ones are sunflower and cottonseed oils as well as cow and sheep fats.

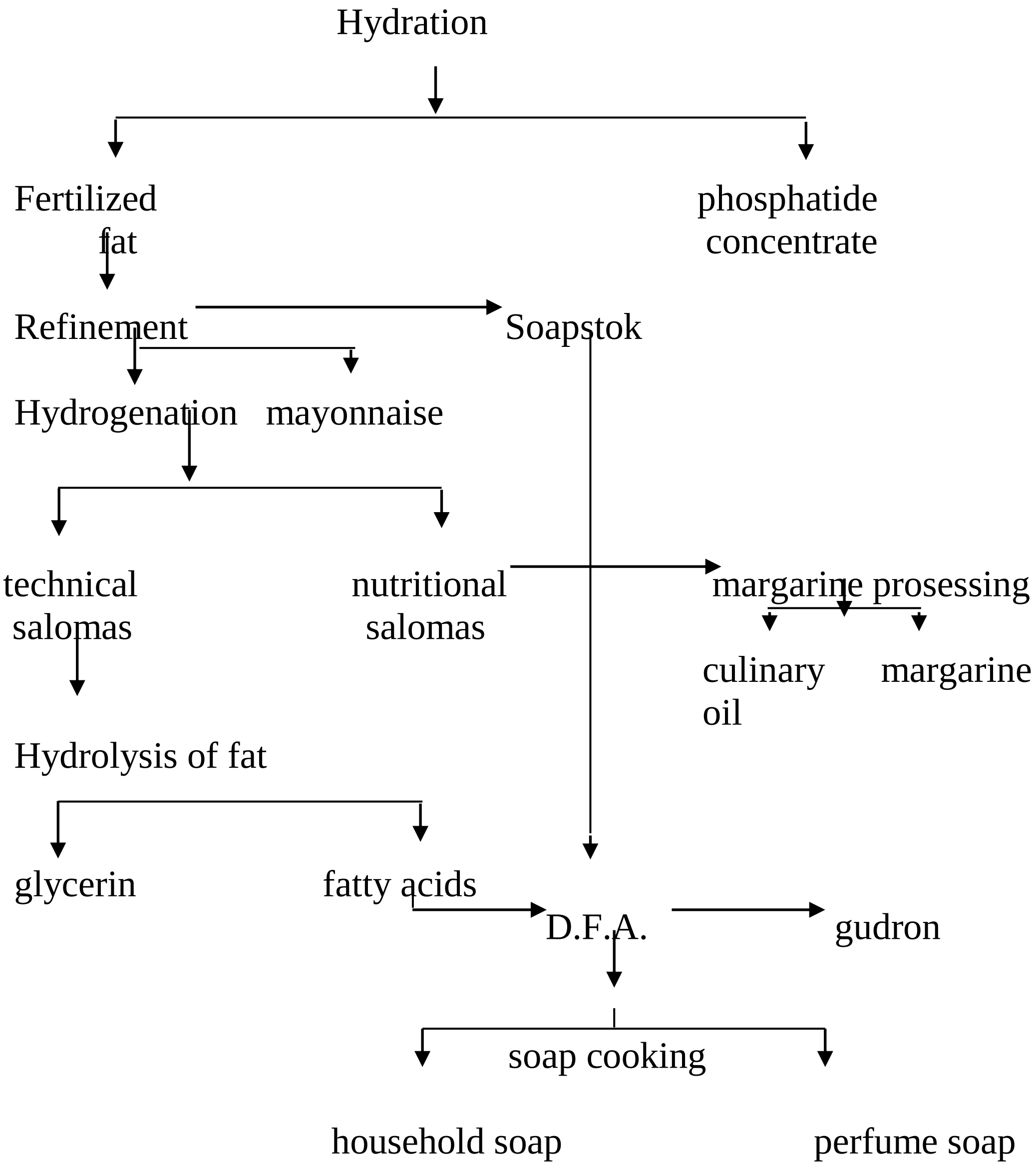

Types of oily raw materials
Oil raw materials

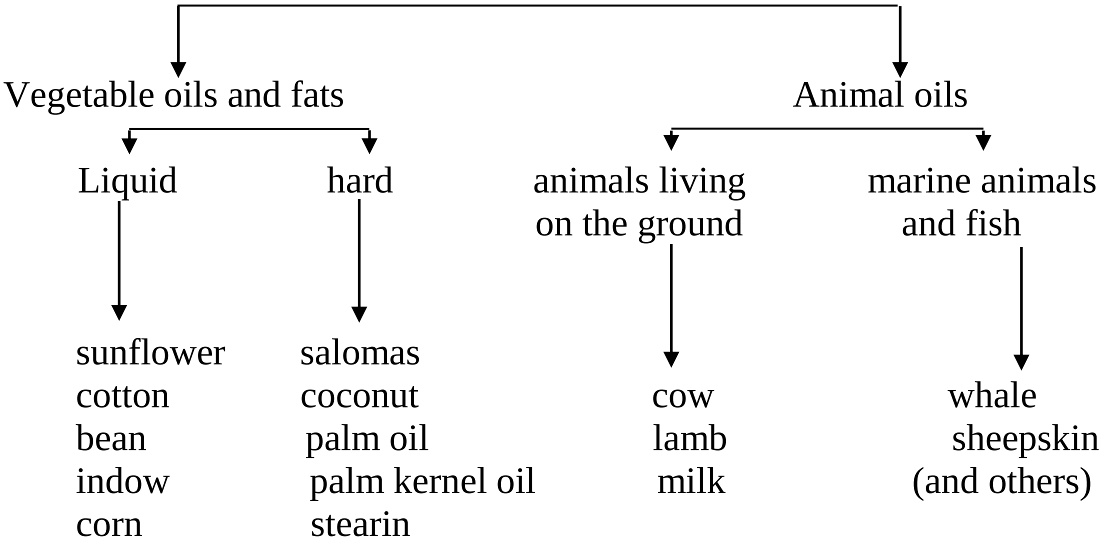

In our country, natural resources of solid and semi-solid fats are limited and do not satisfy the needs of the national economy, so liquid vegetable oils are converted into solid oils with varying hardness and melting temperatures by hydrogenation. The product formed during the hydrogenation process is called salomas. Also used fatty acids which are got from soapstock, or fatty acids which are obtained during hydrolysis of oils.

Organoleptic and physical-chemical parameters of oils used in the oil refining industry are determined by standards (GOST, OST, TU). In the oil processing industry, along with vegetable oils and animal fats, various fatty acids are widely used (canifole, naphthenic acid, etc.)

Content of vegetable oils. Vegetable oils obtained by industrial methods are contain three-glycerol, fatty acids and mixtures of non-fat ingredients.

Non-fatty compounds of non-refined oils are mechanical additives (roasted corn, chips, etc.), moisture, toxic chemicals and other substances. The presence of poisonous chemicals are explained by the fact that in the agricultural sector, various toxic chemicals (pesticides, herbicides, etc.) are widely used in the fight against various pests and diseases, which accumulates in the fatty tissues of the plant and the separated with oil.

Accompanying substances. Although these substances are present in a small amount in oils, they have a considerable impact on their properties. The accompanying compositions of vegetable oils are divided into two groups;

Group 1 - Substances that are formed during the growth process and accumulate in unchanging form in oils.

Group 2 - Substances which were in cotton seeds and changed by technological processes (temperature, pressure, moisture) while getting oil as well as substances that are transformed into oil during storage.

Group 1

Ingredients containing phosphorus. (phospholipids).
Pigments (carotene, xanthophyll, gossypol, chlorophyll).
Waxes (waxy substances).
Tokoferols and fat-soluble vitamins, sterols (sterids).
Free fatty acids.
Taste and odours.
Sulpholipids, glycolipid, glycoprotein, phosphoproteids.

Group 2

Defective products of oxidation (oxygenates, aldehydes, ketone low molecular fatty acids, etc.). Products and accompanying substances (fatty acids, polymerization products, etc.) generated from thermic and hydrolitic changes of glyceride.

Table 1

The amount of accompanying substances in some fats

Oils	Tokoferols, mg %	Sterins %	Non-soap ingredients %	Phosphatides%
Sunflower	about 70	0,5-0,91	0,5-0,9	0,2-1,4
Cottonseed	80-100	0,31	0,5-1,5	1,12-2,55
Bean (extraction)	90-180	—	0,2-0,3	1,9-4,5
Indov	about 50	0,35	0,2-1,0	1,15-1,28

Mixtures and accompanying substances break down the smell and taste of the oil.

During refining process, these compounds and accompanying substances are lost, so these fat can be used for food.

Test questions:

1. Role of oil enterprise in the food industry.
2. Emergence and development history of the oil and fat industry.
3. Technology of processing of fats.
4. Structure of vegetable oils.
5. The purpose of teaching science.
6. Subjects required for this science.
7. Information about oil and fat factories of Uzbekistan
8. Stages of oil processing technology
9. Crude oil processing industry
10. Mixtures in fats

2-LECTURE
REFINING OF OILS AND FATS

Plan: Cleaning methods. Requirements for refined oils and fats depending on their intended use and application. Processes used to implement certain refining methods, their classification and purpose, hydromechanical, physicochemical and mass transfer.

Key words and phrases

Refinement; Unprocessed forpress oil; Shedding; Crushing; Centrifugation; Filtering; Speed of decomposition

Refining is the proces of cleaning of mixture of oils. Food industry produce oils and fats for direct consumption, as well as for the preparation of margarine, mayonnaise, hydrogenated oils, soap, glycerin, fatty acids, olives and other products. Full cycle of refining process includes separating of phospholipids, vitamins, free fatty acids, dyestuffs and smells. Various methods are used for this purpose, based on the specific properties of specific reagents. These include separating of phospholipids by hydration with water or aqueous solution of electrolytes, separating free fatty acids in the form of sodium salts, and separation of colorants-pigments by means of sorbents, separation of odours and smells by deodorization of oils. The above-mentioned methods do not have high selectivity. An example of this is the reduction of free fatty acids during hydration and decreasing of oil colour in the neutralization process.

Depending on the composition of oils and the subsequent use of the fat, the desired methods of refining is selected. If oils are intended for food, oils are fully refined and deodorized under existing State Standards.

But oils for production of hydrogenated oils are not deodorized.

When choosing the technological mode of refining each type of fat, its specific properties should be taken into account.

The following requirements are met for the refinement process. Leaving the glyceride part of oil completely unchanged, maintaining suitable of them for consumption, reduction of losses and wastes. The most favorable conditions for the process of refining the oils are very important in solving these problems: the amount of sodium hydroxide, its concentration, the temperature of the neutralization process, the mixing speed and so on.

Classification of processes and refinement methods:

Different refining methods are used depending on the composition, quality and use of oil.

Depending on the nature of the main processes and the effects of the reagents in the process of refining, they are divided into 3 groups.

1. Hydromechanical (physical)
2. Physico-Chemical (Chemical)
3. Mass transferring (physicochemical).

Table 2

Classification of the methods of refinement

Processes	Refining methods	Main aim
Hydromechanical	Defecation, purification, centrifugation, filtration	Separation of suspensions or non-stiff liquids
Physico-Chemical	hydration	Separation of phosphatides and other hydrophilic substances
	Freezing	Removal of soluble substances at high temperature
	Neutralization	Removal of free fatty acids
	Washing	Purification of soap and water-soluble materials
	Drying	Release moisture
Mass transferring	Bleaching	Remove the colorants, pigments and soap residues
	deodorization	Extraction of smelling agents
	Distillation refinery(without alkaline)	Extraction of free fatty acids and fragrances

Hydromechanical processes include the following refining methods: purification, defecation, centrifugation, filtration.

Physical and chemical processes include: hydration, cooling, neutralizing, washing, drying.

Mass transferring processes include: bleaching, deodorization, refining by distillation techniques.

However, the classification of the above described refining procedures is conditional. Not all ingredients can be lost by one method. Therefore, in practice, there are several ways to integrate into one technological scheme. For example: at the refining process of oils, which is used for the food, include the following refining methods: drowning ---- filtering --- hydration - alkaline refining --- drowning ---- defecation ------ centrifugation --- bleaching --- deodorization.

DEFECATION, PURIFICATION, CENTRIFUGATION, FILTRATION

Defecation, purification. Defecation is a natural drowning process under the weight of the particles in liquid environments.

Drowning speed of the spherical particles is determined conditionally by the Stox formula:

$$\upsilon = d^2 g (p_1 - \rho)/18\ \mu$$

there is: υ - drowning speed, m/s;
d – diameter of particle, m;
g - acceleration of weight power (9,81 m/s^2);
p_1 – density of hard particles kg/m^3;
ρ - density of oil, kg/m^3;
μ - dynamic viscosity of oil Pa·c.

To increase sinking speed, process should be carried out at high temperature.

Drowning process. It is used to drow the exhausted and coagulant substances in the primary oil purification. In order to accelerate the drowning, the particles are drowned in a thin layer in the continuous working cutlery - separator unit.

The structure and principle of operation of the continuous working cutlery - separator is as follows:

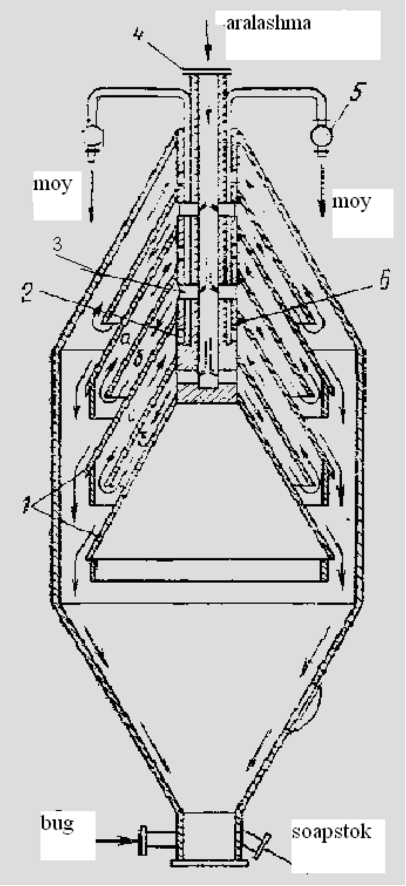

Figure 1. Continuous working cutlery - separation circuit diagram

The cylindrical device with lid and bottom part, which is in a conical shape, there are a number of conical plugs inside space of the device, which divide inside the device into several cameras (A and B). Each camera is confined with plate (1) from the top and bottom of the chamber and acts as a separate separator. The number of plates depends on the equipment's production capacity. For efficient operation of the plates, they are placed at an angle of 35-40 ^{0}C.

The oil level in the plates is 30-50mm. The suspension is continuously fed into the camera b through the pipe (4), which is placed in the center, and hole (3). The oil moves through the camera b and pass to the camera a by bending the edge of the plate. Due to the low velocity of the heavy phase, it is collected on the surface of the (1) plate and slides down into the lower part of the cutter. The defecated oil is removed through the hole (2) at the bottom of the top plate of the camera and through the individual tube(6) of each camera through.

All transmission pipes are integrated into the collector. observation window is mounted on each transmission pipe, to observe flowing oil from the camera.

Defecation process is used to defecate exhausted and coagulant substances in the primary oil purification.

Defecation is used as auxiliary operation in the periodic refining. In order to accelerate the defecation process, the particles are drowned in a thin layer in the continuous separation device.

If it is seen that blurred oil exits from any camera, it is stopped immediately or the amount of oil that exits is changed. Hence, the speed of moving of oil through the camera changes. The deposition is periodically or continuously cleaned by a patrol on the bottom of the equipment.

Centrifugation. Drowning in the gravitational field is less effective. If the separation is carried out at the escape area from the center, the process will accelerate.

We compare the drowning velocities (drowning speed) under the effect of the S force on the particle.

on the escape area from the center — gravitational area

$$C_м = \frac{mw^2}{R} \qquad\qquad C_g = mg$$

there is: C_m, C_g - power,

m - mass of particle, kg;

$\frac{w^2}{R}$ - acceleration from the center, m/c^2

R - radius of rotation, m

w - speed of rotation, m/c;

$$V_м = \frac{d^2(p_1 - p)w^2}{18\mu R}; \qquad\qquad V_\Gamma = \frac{d^2(p_\Gamma - p)g}{18\mu};$$

$\frac{C_м}{C_г}$ and $\frac{V_м}{V_Г}$ proportions, shows how many times the force acting on the particle increases.

$$\frac{C_м}{C_Г} = \frac{V_м}{V_Г} = \frac{d^2(p_1-p)w^2}{18\mu R} \cdot \frac{18\mu}{d^2(p_1-p)g} = \frac{w^2}{Rg};$$

The ratio of the speed of the acceleration of escape from the center to the acceleration of weight power is called separation coefficient

$$\Phi_р = \frac{w^2}{Rg}$$

Rotational speed

We substitute the values and define the following.

$$w = \frac{2\pi Rn}{60} = \frac{\pi Rn}{30}$$ in that case

$$\Phi_р = \frac{\pi Rn}{pg30} = \frac{Rn^2}{900}$$ n - frequency of rotation

The separation coefficient is proportional to the rotation frequency frame and the radius of rotation.

Depending on the separation coefficient, there are normal and extremely fast centrifuges in the industry.

Normal centrifugal machines (separators with Fr <3500) are used to separate suspensions.

Extremely fast centrifugal machines (Fr> 3500) are used to separate dispersant suspensions and emulsions in the oil.

Separators are divided into two groups based on the principle of operation:

1. A sedative clarifying (clarification) for separation of suspensions.
2. Separating fluids to separate densities, slightly different densities.

The liquid is supplied through the central pipe of the device. As a result of central escape forces heavy liquids are removed, where they are collected and climbed up and continuously emerge from the separator. As the oil is a light fraction, it is removed from the separation near the middle part of the device, under influence of the separating liquid. In the separating liquids there are always a small amount of solid particles that reduces the efficiency of the phase separation. In order to overcome these shortcomings, self-emptying structures of separators have been developed. They are used in neutralization and hydration processes.

Separators with a drum speed of 6500 rot / min with capacity from 80 to 300 t / day are used in the different scemes of refining.

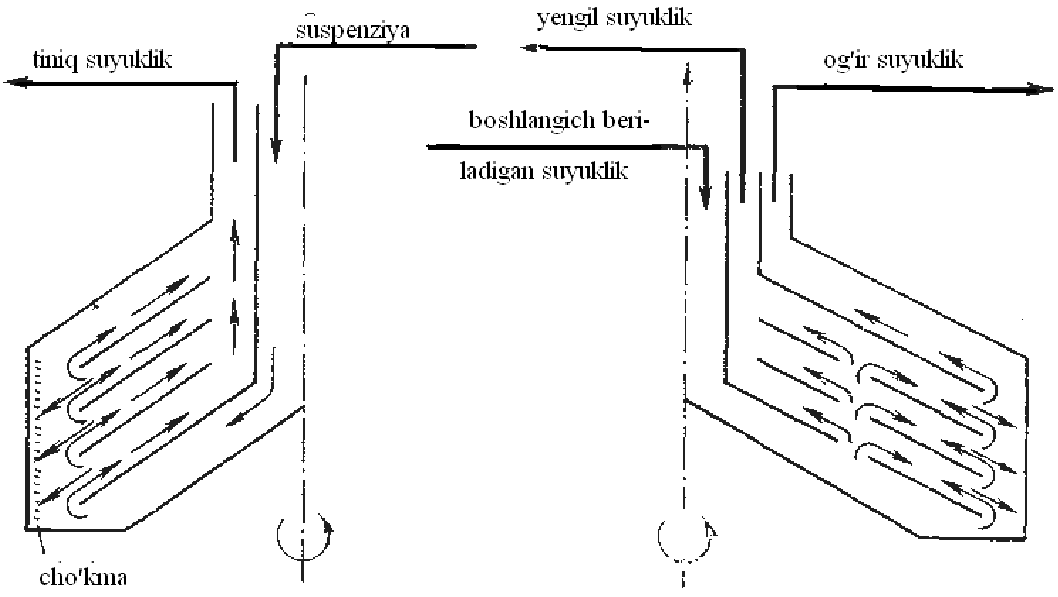

Figure 2.

Sedatives (cleansers) – for separating suspensions

Separator (purulators) - for separating liquids with slightly different densities

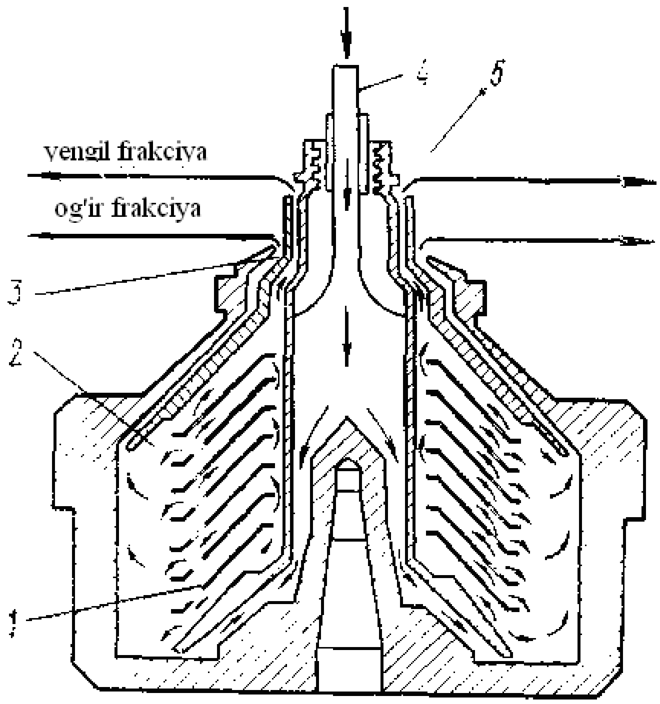

Figure 3. Working principle scheme of the separator's separating drum.

The separated fluid is transferred from the middle pipe 4 to the inside of the rotating drum 2. The interior of the separator consists of conical pans. As a result of the center escape force, a heavy liquid is collected at the edge of the drum, rising up and continuously pulls out of the separator through 3 channels. The oil is a light fraction, collected at the center of the separator, that is, around the bullet, goes out through the 5 channels, under the effect of the separation fluid.

Filtering. Solid matter is separated from liquid by means of a thin porous barrier. Liquid filtering substances pass through material capillaries, particles that are larger than the capillary size are deposited on the surface of the material and precipitate. This deposition has a great effect on the filtration process because it is collected and serves as a filtering agent.

The filtering speed (m/s) is expressed in the following formula.

$$\omega = \frac{\Delta V}{Sd\tau}$$

The basic differential equation of filtering is as follows

$$\frac{\Delta V}{Sd\tau} = \frac{\Delta P}{\mu(R_{oc} + R_{\phi n})}$$

there is: V - filtrate capacity, m^3;

s - filtering surface, m^2;

τ - filtering time, s;

p - pressure difference, n/m^2;

μ - dynamic viscosity of the liquid phase, Pa·s;

R_{oc} - the resistance of the sedimentary sheet, m^{-1};

R_{fn} - filtering barrier resistance, m^{-1};

To increase the filtering speed, it is increased the pressure and reduced the viscosity. The deposition is subdivided into compressed and non-compressive groups. Non-compressive sediments are such depositions, where the pores do not decrease even when the pressure increases, but the pores decrease in the compressive sediments. Sediments (phosphatides, proteins, mucous membranes, etc.) formed during filtering of oils are compressive sediments. In the fat-and-oil industry, cotton (belting, diagonal) or synthetic filtering fabrics are used.

Filtering is performed on a regular or continuous basis. Filtrpress consists of flatbeds and empty frames, which are arranged vertically in a straight rectangular shape. Each rama is wrapped in a filter cloth. Plates and frames are fitted to the horizontal base brackets fixed to the fixed body. On the side of the frames and ramas, there are holes, which form the channel together. Suspension (oil) is suplied from the top of the filtrpress, and it is flooded through the bottom of the filter.

The filtrpress consists of 15-50 vertical filtering cells placed on the horizontal stem.

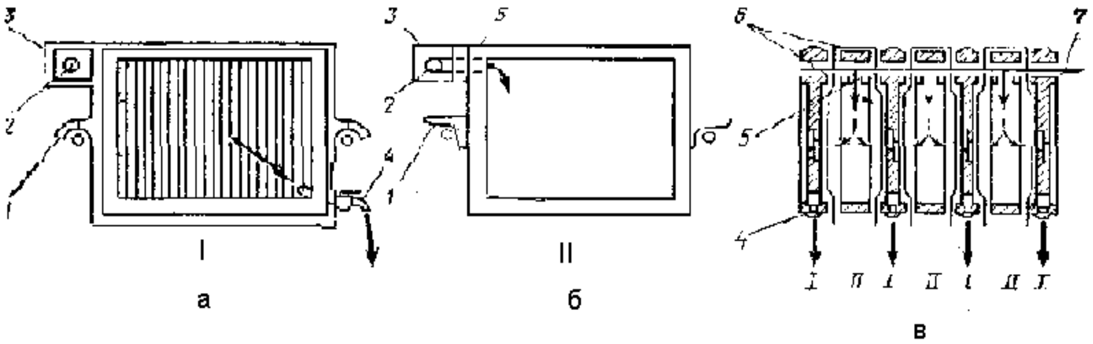

Figure 4. Filter-press controls.

As can be seen from the picture above oil passes through the channel(7), through the hole (5), to the inside of the frame II. Under pressure, the oil is filtered through the fabric.

The oil flows from the flare surface of the plate I and collects into the collecting screw, through the hole(4). The filter deposited on the surface of the fabric gradually fills the gap space. When the free space of the frame is filled with sediment, the pressure of the filtering process increases, the filtering is stopped, and the filtrpress is cleaned. At the start of the filtering process, when it is formed filtrate layer on the surface of the fabric, it is flown blurry filtrate, it is separately collected and filtered again. The pressure should not exceed 0.15-0.20 kPa (1.5-2.5 kgs / cm^2) when filtrating.

Different filters based on mechanical and automated release of sludge are known. Usually 2 filters are set for continuous operation. The current filters are disk filters, patrone filters. Typically, a thin layer of filtering agent is formed before filtering.

Test questions

1. The need for oil refining.
2. Methods of refinement
3. Requirements for refined oil.

3 - LECTURE
HYDRATION OF OILS

Plan: Phosphatides of plants, their content in oilseeds and oils. Composition and basic properties. hydration agents and their characteristics. Technological parameters of the hydration process. Used technological schemes and devices.

Key words and phrases

Hydration; Phosphatide concentrate; Hydrogenating agents; Fatty phosphatide emulsion

The hydration process is carried out to extract phosphatides from the oils. The most valuable of the accompanying ingredients in the Glycerides are phospholipids. They are free in oily seeds in the oilfree phase, or in the condition that they are bonded to proteins and carbohydrates. Depending on the mode and condition of receiving unrefined oil, it is separated from the oily raw materials from 20% to 90% of phosphatides. The table below shows the amount of phosphatides in oils and oily seeds.

Table 3

Oil	The amount of phosphatides, in %	
	in seeds	in oils
Soybean	1,0 – 2,5	
forpress	-	1,00 – 1,50
ekstraction	-	
in forpress oilcake	-	1,5 – 3,0
raw crash	-	2,0 – 4,5
Sunflower	0,3 – 0,5	
forpress	-	0,30 – 0,70
ekstraction	-	0,90 – 1,20
Cottonseed	0,8 – 1,0	
forpress	-	1,06 – 1,63
ekstraction	-	1,43 – 2,84

Phospholipids include glycerophosphatides, isonitephosphatides, and sphingomyelins. Vegetable oils include glycerophosphatides that have the following formula:

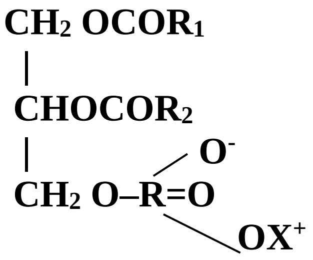

where: R_1 and R_2 are hydrocarbon residues of saturated and unsaturated fatty acids.
X * - hydrogen, nitrogen-based (ethanolamine, methylethanolamine, dimethyl ethanolamine, choline) amino acids.
The following are the basic groups of glycerophosphate in vegetable oils.

X^+ (structure component)	phospholipids
N	phosphatidic acids
$-CH_2CH(NH_2)-COOH$-serine	phosphatidylserines
$-CH_2CH_2NH_2$-ethanolamine	phosphatidyl ethanolamines (kefalins)
$-CR_2CH_3NH(CH_3)$ -methyl ethanolamine	Phosphatidyl-N-methyl ethanolamines
$-CH_2CH_2NOH(CH_3)_3$-choline	Phosphatidylcholines (letsytines)
$-CH_2-CHOH-CH_2OH$ – glycerin	phosphatidylglycerides
	Phosphatidylinositol

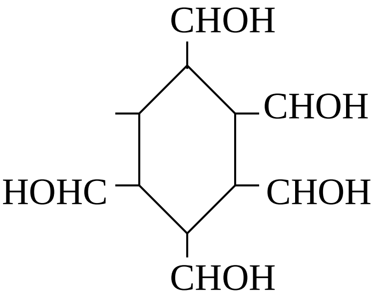

- Inositol

The essence of the hydration process. The molecule of phosphatides has different properties: hydrophobic part - fatty acids, hydrophilic part - active group (efir, hydroxyl, carboxyl and others).

Despite the fact that the amount of phosphatides is low, it has a great impact on the quality of fat due to its activity. During storage, they cause diminishing of oil colour, which stabilizes the emulsion and, as a result, it is difficult to separate the phases, while phosphatides are adsorbed on the surface of the sorbent, which increases its consumption.

During hydrogenation, phosphatides reduce catalyst activity. This indicates that phosphatides should be separated from refined oil. The basis of the hydration process is that phosphatides are exposed to water, coagulates, and falls into water. For example: phosphatidylxoline (lecithin).

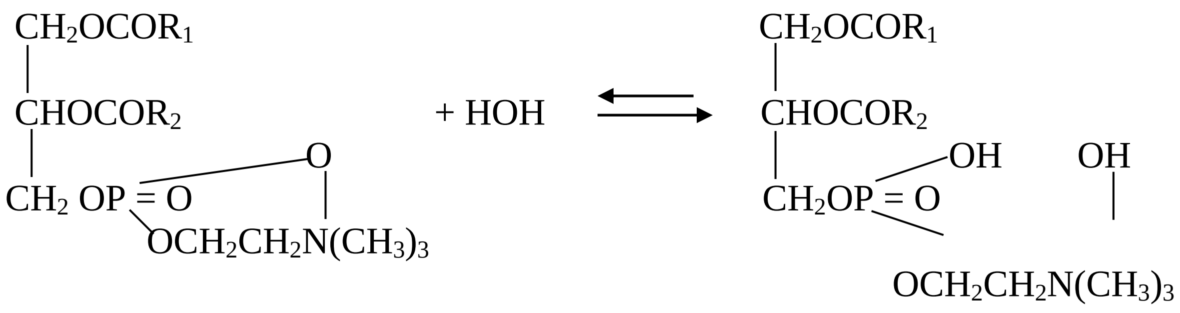

soluble in oil non-soluble in oil

Hydration technology. Hydration technology consists of the following steps:

1. Mixing fat with a hydration agent.
2. Preserve oil-water mix for phosphatides to coagulate.
3. Separation of degraded fat and phosphatide emulsion phases.
4. Drying of fat, drying phosphatide emulsions and obtaining and packing phosphatide concentrate.

The amount of hydrate agent is depend on the amount of phosphatide, its composition, and varies from 0.5% to 6%. If water is insufficient,it cause to an ending hydration, the majority of water forms an emulsion. In the course of hydration, the acid content of fat decreases in the range of 0.4-0.5 mg KOH (separation of the sulfide phosphatides), and phosphatides, as well as fibers and slime.

Non-hydrated phosphatides include phosphate and polyphosphate acids, phosphatidylserines and their salts (Ca^{2+}, Mg^{2+}, Na^{+}). Also included are phosphatide, polyphosphatidic acids with sterols and aliphatic alcohols. The polarization of non-hydrated phosphatides is lower than that of phosphatides that are hydrated.

Removal of non-hydrated phosphatides. After hydration process, there left 0.1-0.2% of non-hydrated phosphatides remains in the fat. To eliminate non-hydrated phosphatides, the hydrated oil is processed with concentrated phosphoric acid (0.05-0.2% relative to the weight of oil) Quantity of water:

sunflower oil	0,5-3 %
cottonseed oil	up to 5 %
bean oil	up to 6 %

Hydration methods. There use continuous dosing and hydrate agent and reactor-turbulier in the mixing of fat in different hydrolysis schemes.

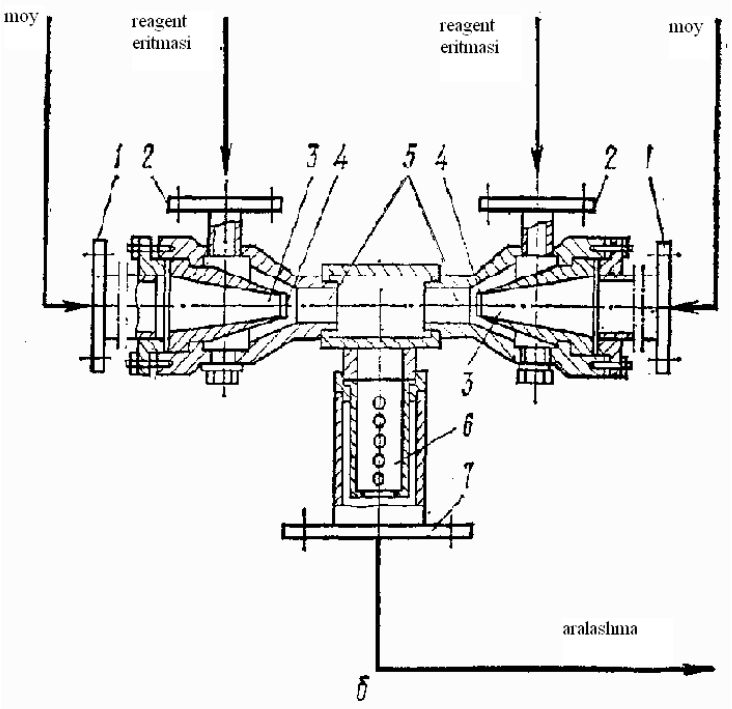

Figure 5. The figure below shows the structure of the reactor-turbulier

1 - oil supply stove, 2 reagent, alkaline 3 - soplo, 4 - receiver camera, 5 - mixing camera, 6 - pump, 7 - compound output stack

Separators or cutlery are used to phase oil - phosphatide emulsions.

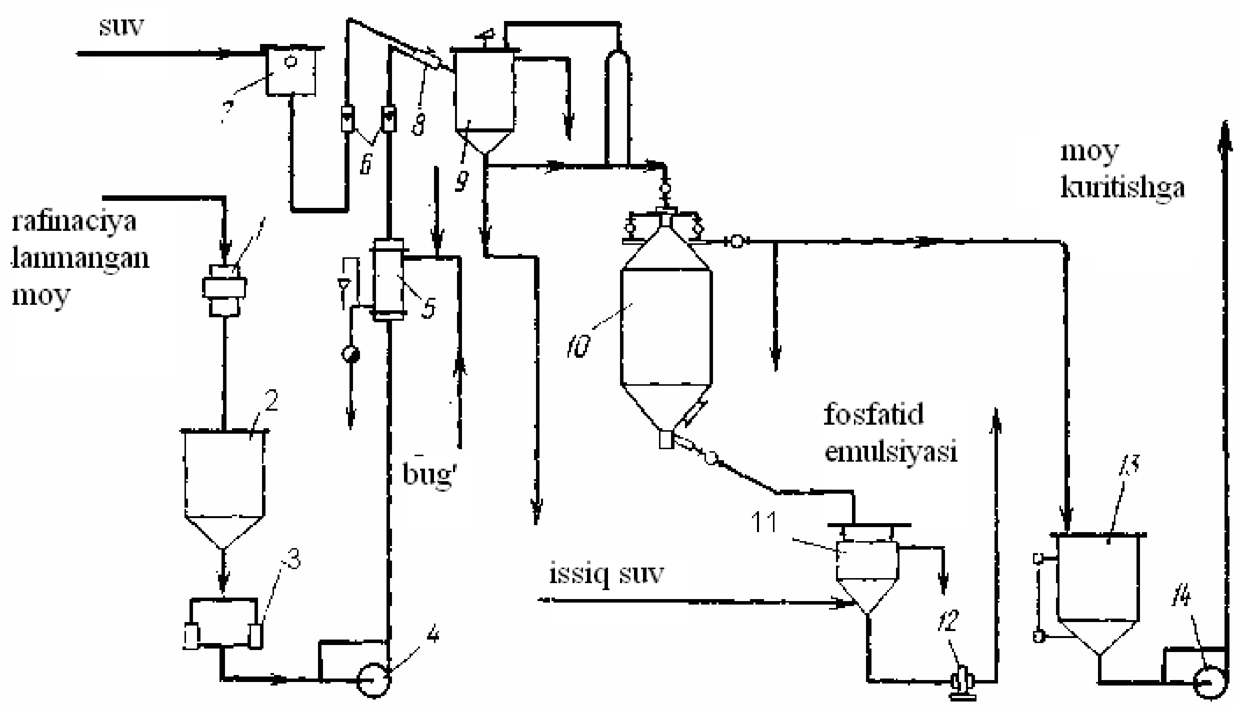

Figure 6. Technological scheme of separation of the phases formed during the hydration process in the cutter.

The non-refined oil is automatically weighed in scales(1) and to the tank (2), through filters (3), pumps (4), heat exchangers(5) it is heated to (45-50 °C) and transferred to the mixer (8) via the rotametr (8). The water through level stabilizer (7) returns to the stirrer (8) via the rotamert(6). The mix of oil and phosphatide emulsion (9) is held in the ekspositor for 30 minutes, then mix at speeds of 13 rotation / min, coagulation is carried out, and the content of the phosphatides increases and then the oil and phosphatide emulsion is separated in the cutter separator(10). The phosphatide fractions are collected in the tank (11) as well as the hydrated oil is collected in another tank(13). It is then pumped (14) to the next stages of the refining. The phosphatide emulsion is pumped (12) to the drying of phosphatide concentrate.

Drying of hydrated oil. It is not possible to store moistened hydrated oil even for a short period of time as moisture causes oxidation. As a result, the acid number of the fat increases. Therefore, the hydrated oil is dried in column vacuum drying equipment continuously.

Vacuum drying apparatus. The oil with the temperature of 85-90 ^{0}C is pulled through the pipe(3) and scattered via 3 nozzles (sprayer) (4). The dropper (5) prevents the drop from entering the vacuum system. The lower part of the apparatus (2) has a contact surface (7) from plates, which also serves to evaporate moisture from the oil. The residual pressure during the drying process is not greater than 2.66 MPa (20 mm sim.). In the apparatus, the vacuum is generated by a three-stage steam ejector or by means of a water vacuum pump (6) via branch pipe. Dried oil is pumped through the pump (1) by means of a shtutser to the bottom of the apparatus. If the level of oil level in the apparatus is lower than the threshold level, the leveling pad 8 will be released and the pallet will open, so that the oil in the exhaust pipe returns to the device. Thus, the same level of oil is stored on the equipment.

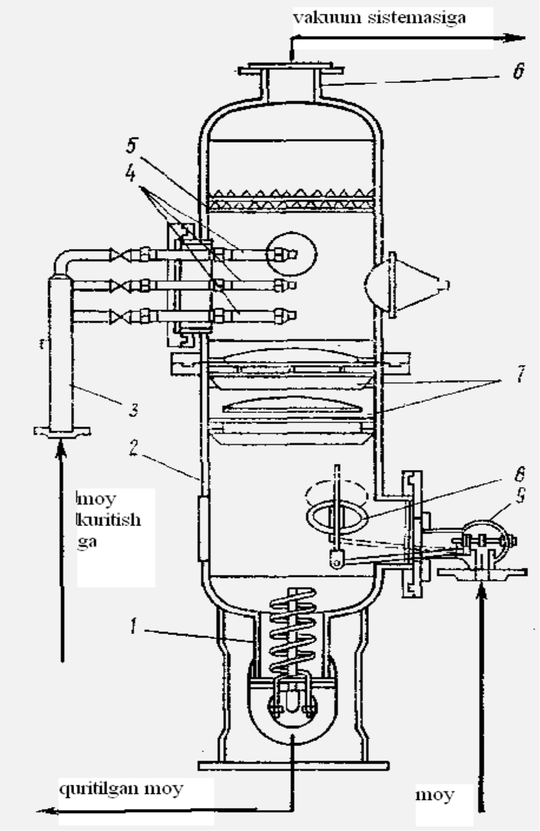

Figure 7. Column type steam-free vacuum-drying apparatus.

Production of phosphatide concentrate. The phosphatide emulsion contains 55-75% water, 15-30% phosphatides, 15-20% fat. Phosphatide emulsion is rapidly sent to the drying. This process is performed on the layer to preserve the quality of phosphatides. Drying is carried out at a temperature of 75-90 °C, with residual pressure equal to 20 mm.

Table 4

Characteristics of phosphatide concentrate

Indicators	For food	For feeding
Colour, mg iodine	18	not specified
The amount of moisture and volatile substances,%	1,0	3,0
The amount of phosphatides, %	55.0	40,0
The amount of oil, %	45.0	60,0
The acid content of the fat removed from the phosphatide concentration mg KOH	18	25

It is used horizontal rotary-plating drying apparatus to dry phosphatide emulsion: they are cylindrical and conical. The production capacity is about 100 kg / s of phosphatid concentrate.

The phosphatide concentrate used for food is placed in metal container with a capacity of 30-40 l, and if for feeding, in barrels.

Recently, it is used the scheme of company "Lurgi" (Germany) for complete hydration.

Test questions

1. Hydration of oils
2. The amount of phosphatides in the masses
3. The essence of the hydration process
4. Methods of hydration
5. Calculate the amount of hydrate in the hydration process
6. Non-hydrated phosphatides.
7. Changing the fatty acids in the hydration process.
8. The amount of hydrate agent in the hydration process.
9. The amount of fatty phosphatides after hydration.
10. Acquisition of phosphatide concentrate from phosphatide emulsion.

4 – LECTURE
ALKALINE NEUTRALIZATION. ALKALINE REFINING TECHNOLOGY

Plan: Methods for removing free fatty acids from fats and oils. The essence of the alkaline neutralization process. Calculation of alkali consumption. Preparation of an alkaline solution. Alkaline cleaning mechanism. The influence of various factors on the processing process. Waste disposal. Neutralization methods and technological modes. Soap residue and moisture loss from neutralized oil. Alkaline cleaning of cottonseed oil. Flow chart of periodic cleaning. Flow chart of continuous purification of cottonseed oil by the emulsion method.

Key words and phrases

Alkali; Oil in the oil – fuza; Soapstock

Vegetable oils have a certain amount of free fatty acids that depend on the quality of fat. Free fatty acids lead to poor fat quality and reduce nutritional value. At high temperatures free fatty acids can cause corrosion of the apparatus. The acid content of fat used for food should not exceed 0.2-0.3 mg KOH. This leads to the need to remove free fatty acids.

In the industry, fatty acids are lost in the following ways.

1. Alkaline neutralization of free fatty acids (alkaline refining).

2. Loss of free fatty acids at high temperature and vacuum (distillation refining).

3. Determination of free fatty acids by selective use of fat-soluble solvents (extraction refining)

In industry, alkaline refining and in recent years, distillation refinement is used more often. Refining with selective solvent is still practically not used in oil-fat factories.

Alkaline refining is a common practice. In this process, there occur non-fat soluble salt of fatty acids, that is soap. This reaction is expressed as follows.

$$RCOOH + NaOH \rightleftarrows RCOONa + H_2O$$

The aqueous solution of soap is separated from fat by large density. Separated soap mass is called soapstok. Soaps, according to their highly adsorbed properties, dissolve the following ingredients from fat: phosphatides, proteins, mucous substances, dyestuffs and so on. Soaps also contain mechanical impurities. The alkaline contains a certain amount of neutral fat (triglyceride). Sometimes,there are added a large amount of alkaline to refine the oil.

Calculation of alkali consumption. Theoretical amount of alkali required for refining is determined by the following formula based on the number of acids.

$$I_n = Q\ 0{,}714\ K.c. \quad (kg)$$

where: Q- the amount of neutralizing oil, kg
0,714 = 40/56
K.c - acid number

However, the theoretical amount of alkaline is not enough to neutralize the fat, as some of the alkali are consumed to soak neutral fat.

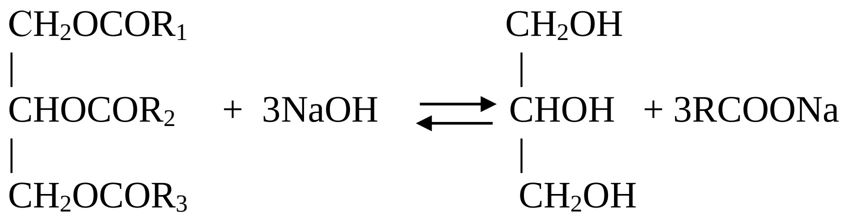

$$\begin{array}{l} CH_2OCOR_1 \\ | \\ CHOCOR_2 \end{array} \ \begin{array}{l} \\ \\ + \ 3NaOH \end{array} \ \rightleftarrows \ \begin{array}{l} CH_2OH \\ | \\ CHOH \ + 3RCOONa \\ | \\ CH_2OH \end{array}$$

$$\begin{array}{l} | \\ CH_2OCOR_3 \end{array}$$

Also, some of the alkaline reacts with some of the fatty compounds.
For example: with gossipol in cotton oil:

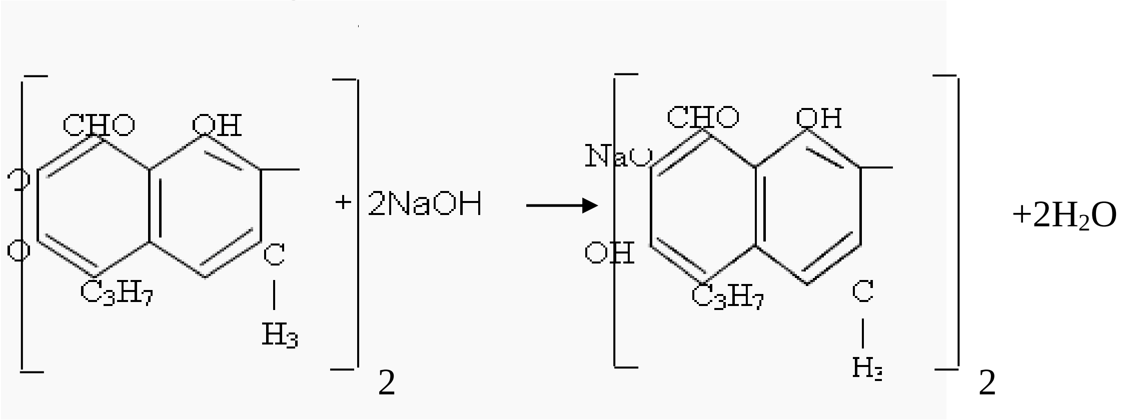

Finally, a certain amount of alkaline solution goes out with the soapstock. As the amount of sodium alkali is insufficient, there is occur sour soap.

RCOOH + RCOONa ===> RCOOH * RCOONa

The sour soap is well dissolved in the oil and does not dissolve in water. As a result, it is difficult to separate it from the fat. Therefore, there are obtained excessive amount of alkaline. The excess amount of alkaline depends on the nature and quality of the refining oil. The excess sodium alkali for light oils is 5-50%, and for dark and hard refining oils - 200-300%. The concentration of alkaline is obtained from 10 to 300 g / l, depending on the type and quality of the fat.

The amount of excess sodium alkali is calculated by the following formula:

$$И_0 = \frac{И_н \cdot У}{100}; кг/m$$

U – excess amount of alkaline, %
I_n – theoretical amount of alkaline
The total amount of alkaline to neutralizing is:

$$I_u = I_n + I_0 , \quad kg/m$$

Preparation of alkaline solution. Sodium alkaline concentrate (42-45%) or solid (92%) solution is brought to the plant in 200-400 kg of steel tank.

To prepare the working solution at the required concentration, add water to the concentrated solution of alkali.

The concentrated solution consume will be as follows.

In terms of weight

$$g = \frac{И_у \cdot \rho}{a}; \qquad \text{kg/m}$$

ρ - density of concentrated solution, kg/l

a – concentration of concentrated solution, kg/l

In terms of capacity

$$V_1 = \frac{И_у}{a}; \qquad \text{l/m}$$

The consume of the working solution is relative to weight

$$g = \frac{И_у \cdot \rho_1}{a_1}; \qquad \text{kg/ m}$$

ρ_1– density of working solution, kg/l

In terms of capacity

$$V_2 = \frac{И_у}{a_1}; \qquad \text{l/m}$$

a_1 – concentration of working solution, kg/l

The amount of water used to prepare the working solution of the alkali:

$$V = V_2 - V_1, \quad \text{l/t}$$

Alkaline refining mechanism. A.A. Schmidt thoroughly investigated the process of refining, using the droplet method. This method is based on the observation of the movement of the emulsion droplet in the fat layer.

When the droplet drops into the fat, the soapy panel is formed by the reaction of free fatty acids. Under the effect of the oil, soapy panels are disposed in the opposite direction to the front of the droplet drop, and then drop out of the drops, and in this case, the bag is formed, which contains alkaline and fat. This alkaline is soaked in oil. Depending on the reaction of the solvent, a new curtain is formed. This process continues until all the alkaline is consumed, or the droplet drops to the bottom of the apparatus. The soap contains a certain quantity of phosphatides, dyes and neutral fat. Through the soap layer, the soapy curtains combine to form a piece of motion. These fragments fall into the bottom of the apparatus and form a soapstock. Thus, in the soapstock contains: soap, neutral oil, mixes, a certain amount of alkaline, water and accompanying substances. The flow of the refining process and the structure of the soapstock depend on the temperature of the fat, the alkalinity, the concentration and the process conditions.

The effect of different factors in the refinement process.

Temperature. As the temperature rises, the refining rate increases and at the same time increases saponification of neutral oil. The temperature of the process depends on the concentration of the alkali solution. The higher the concentration of alkalinity, the lower the process temperature. Usually the temperature is between 20-25^{0}C (for cotton oil) and 80-85^0 C (for sunflower oil).

Alkaline concentration: As the concentration of alkalinity increases, the rate of neutralization and the saponification of neutral oil also increases. High concentration of alkaline affects to dyestuffs and contributes its separation. The concentration of the alkali depends on the type of oil and acid. The required concentration of alkalinity is usually determined by experiment, because output of the purified oil depends on the concentration of alkaline solution.

Mixing: This factor depends on the concentration of alkalinity and contact time. At high concentrations of the alkalinity the contact time is short and it is mixed very quickly. Intensive mixing while working with concentrated solutions, accelerates the process and reduces saponification of neutral oil. The small droplets of the alkali have a large contact surface with fatty acids and dyestuffs are adsorbed in the soapy panel and the color of the oil is clarified.

Wastes on the neutralization. Efficiency of the neutralization process depends on the quality of neutral oil and waste. Waste is a fatty matter that is separated with soapstock, which is used as a raw material in the oil refining industry.

The main task of the technology is to reduce the amount of waste. Fat in the soapstock is the sum of fatty acids and neutral fats.

$$Y_o = Y_{ok} + N_{yo}$$

where: Y_o - oil in the soapstock; Y_{ok} - The total amount of fatty acids from saponification of neutral oil and fatty acids produced by soap salts in the soapstock;

N_{yo} - neutral fat.

Oil in the soapstock represents the fat content of the soapstock. The increase in the neutral fat in the soapstock is determined by the ratio N_{yo} / Y_{ok}. The smaller the ratio, the more effective the neutralization process will be.

The amount of fat that has been added to the soapstock (in % to the fat mass) determines the amount of Ch_{yo} waste and the proportion of free fatty acids in fat is proportional to X.

$$Ch_{yo} = KX \quad \text{from that} \quad K = Ch_{yo}/X$$

Thus, the neutralization process is done by the neutralization coefficient (K), which indicates how many times the amount of fat in the soapstock exceeds the fat free fatty acids. The neutralization coefficient depends on the type of fat and the method of neutralization. The amount of free fatty acids is determined by the number of acids. For fatty acids containing 18 carbon atoms

$$X = 0,5 \cdot K.s.\text{ , in that case } Ch_{yo} = K \cdot 0,5 \cdot K.s.$$

The amount of refined oil is calculated by the following formula:

$$Mr = 100 \sum(Ч + Й)$$

here: $\sum(Ч + Й)$ - - sum of waste and losses

Neutralization methods and technological modes. The methods of neutralization are basically differentiated by the principles of separation of the neutralized fat-soap solution:

the separation of the periodic phases on the salt-water based gravitational field;

Continuous phase separation at the center of the escape force;

the separation in the alkaline soap phase;

continuous emulsion.

Periodic method - is currently being used for small amounts of oils and cotton oil. This method is performed in neutralizers with a volume of 5, 10, 20 t. Refinement is carried out as follows.

The oil falls into the neutralizer and it is mixed with hot steam (40-45 ° C). With distributor, Calculated and heated alkaline solution to this temperature is given, as well as stirred about 30 min. Then, the temperature of the oil is raised (60-65^{0}C), the mixture is stirred until the mixture of soapstock is formed. Defecated. The oil is poured over the groove. Soapstock is put into a special cap. It is possible to give a solution of water or salt if necessary. Table 5 presents the technological modes for refinement of sunflower and soybean oils.

Table 5

Technological modes of neutralization

Indicators	Acid number up to 7	Acid number over 7
Alkaline concentration, g / l	85-105	125-145
Excessive alkaline,%	10-20	10-20
Starting temperature, ^{0}C	45-50	45-50
Last temperature, ^{0}C	55-60	55-60
Defecation	up to 6 hours	up to 6 hours

The lack of periodic method, the duration of removal, the excess of the amount of neutral oil in the soapstock, and alkaline soak the neutral fat. Soapstock oils are 30-50%.

A. Schmidt proposed a new method - salt-water-based neutralization. This method is based on solubility of the soap screen in the weak solution of the salt, as a result the neutral fat goes out of the soapstock. To do this, to the neutralizer is given 1% concentration of salt-water solution. When the soap decanted, it fell into the salt-water solution. Soap is dissolved and the fat is separated. The temperature of the neutralization is 90-95 ^{0}C (soap is well dissolved at such temperature). Alkaline concentration is 40-45 g / l. The amount of saline solution depends on the acidity of the fat and the concentration of the soap in the solution should not exceed 9-12%. The salt-water based method increases the productivity of the neutralizer and reduces the amount of fat in the soapstock.

Continious method. Separation of neutral oil-and-soapstock phases in the center of the escape-force is the most effective and promising method. In this case neutralization is carried out in special mixers, and the phase separation is performed in separators. There are the following devices that work with this method: A1-JRN, Alfa-Laval, Westphalia, Ganatssa, Sharples. These devices differ from each other in performance and separator used. A1-JRN and Alfa-Laval devices are widely used in the FUS(friendship united states,MDX). The concentration of alkaline and its excess in it are selected based on the type of fat and the number of acids (Table 6). Although the concentration of the alkali solution used in these devices is relatively high, the contact between fat and alkaline is very short, so there is not much of the neutral fat in soap.

The neutralization temperature is 85-90 °C, the fat content of the soapstock is 15-25%, the ratio of fatty acids in the soapstock to no more than 1: 2.5, the residual fat content is not more than 0.1%. The coefficient of neutralization is 1,4 for hydrated oils and 1,5 for salomas.

Table 6

Technological modes of continuous neutralization

Neutralized oil	Acid number, mg KOH	Concentration of alkaline solution, g/l	The excess amount of the alkaline, in% relative to theoretically calculated
Sunflower, soybean	up to 2	70-90	10-20
Sunflower, soybean	2-5	100-130	10-20
Sunflower, soybean	5-10	up to 150	5-10
Sunflower, soybean	over 10	150-170	10-30
Salomas	up to 1	40-70	5-10

The advantages of this method are the availability of all light-colored oils, the use of pressurized separators, shortness of contact between fat and alkaline, automated process, and the optimal fat content of the soapstock.

Test questions

1. Refining of oils.
2. Calculation of the amount of alkaline consumption required for refining.
3. Preparation of alkaline solution.
4. Alkaline refining mechanism.
5. Influence of various factors in the process of refinement.
6. Neutralizing waste.

5 – LECTURE
EQUIPMENT AND APPARATUS FOR ALKALINE REFINING

Plan: Periodically activated neutralizer. Continuous turbulizing reactor. In the method of continuous cleaning of oils, various equipment and devices are used: mixers, separators, coalescers, separators, auxiliary equipment.

Key words and phrases

Neutralization; Excess amount of alkali; Fatty acids; Triglitserid

This method is based on neutralization on the surface of the fat. For this purpose, the oil disperses in the alkaline-water solution and rises upwards due to the density difference. Free fatty acids are diffused on the surface of oil droplets and neutralized with alkaline reaction. Soap is dissolved in the alkaline solution. This process takes place all the way through the fat movement. When oil is released from free fatty acids, it accumulates upward the phase. Good results can be obtained if the concentration of the alkali is 12-20 g / l, the temperature of the oil and soap solution is 70-95^{0}C, the soap concentration in the soap solution is 8-12%, the free-alkaline concentration is 1-5 g / l.

Removal of soap residues and moisture from neutralized fat. After removal of the soapstock there is a soap of 0.05-0.3% in the oil. It destroys taste, oxidizes and reduces catalyst activity during hydrogenation. Soap forms as nickel soap, which reacts with nickel oxides, which is difficult to separate from salomas. When choosing one of the methods for removing soap from neutralized fat, the amount of leftover soluble residue is the main factor. To remove the remaining soap, the oil is washed or treated with citric acid. If the amount of soap is greater than 0.05%, the oil is washed. If less it is treated by lemon acid or phosphoric acid. Washing is done with condensate and softened water. This process is based on the phase separation of the fat with hot water. Washing can be done periodically or continuously.

Periodic washing is done using a stirrer washing-drying machine. The oil is washed 2-3 times. After each rinse(clean), rinse water is removed with defecation.

Trowel(kurakchali) mixers or knive mixers are used for continuous washing. Phase separation is performed in separators.

Each washing requires 7-10% of water to the oil. For the purpose of economizing water, it is recommended that the first wash be washed with the second wash water, and for the second wash using condensate water. Fat in treated water should not exceed 1.5% in the first and 0.05% in the other.

The amount of wastes in washing fats is 0.2% and losses are 0.2%.

Processing with citric acid. So the soap from the oil is completely lost. Lemon acid dissolves in soap and binds iron and nickel ions.

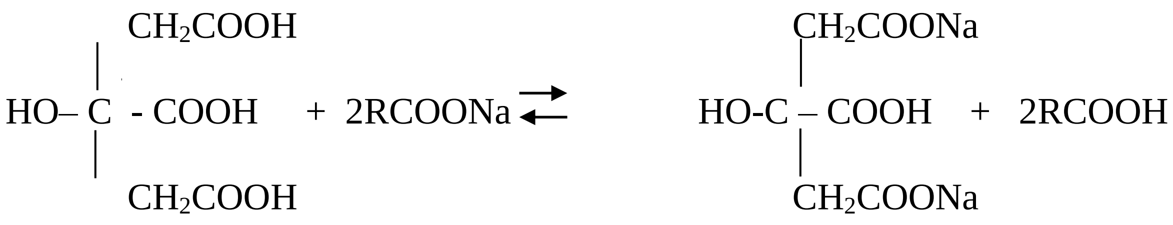

$$\begin{array}{l}\quad CH_2COOH\\ \;|\\ HO-C-COOH\\ \;|\\ \quad CH_2COOH\end{array} + 2RCOONa \rightleftarrows \begin{array}{l}\quad CH_2COONa\\ \quad|\\ HO-C-COOH\\ \quad|\\ \quad CH_2COONa\end{array} + 2RCOOH$$

Citric acid(limon kislota) Na lemon sour salt

The salt of citric acid does not dissolve in dry oil and it is lost by filtration. Acid number of fats, which contain 0.01 to 0.02% soap, slightly rise, because they are treated with citric acid. For 1 t fat give 30 to 50 g of 10-50% solution of citric acid at 90-95 °C, then the oil is dried. When treated with lemon acid it does not have waste, loss is 0.02%.

Drying is the final stage of the neutralization process. Drying is carried out at 90-95^{0}C under vacuum (residual pressure 40-50mm sim.). At this moisture evaporates. Drying is carried out periodically and continuously. In periodic mode - washing and drying apparatus, continuous operation - vacuum-drying apparatus.

Phosphoric acid treatment to fat. In order to reduce the amount of washing water, oil waste, and to save the lemon acid, phosphate acid is used to remove the residue of soap in the neutralized oil. As a result of the exchange reaction, sodium soap is dissolved up to free fatty acids. Processing can be done on separate lines. For this purpose, the concentrated phosphate acid is added with hot water at a rate of 10% in the first wash. This results in an aqueous solution of 0.05-0.1% phosphate acid. The resulting sodium phosphate salt is separated from the wash water. Scientific researches show by using phosphate acid, it is possible to wash neutralized oil once in separated devices. This method of losing the soap residue can be applied to such neutralized oil, which acid number of the fat should not exceed after soap decomposition.

Scheme of oil refining. Periodic and continuous schemes are used to refine the fats. There are separation schemes in continuous diagrams in separators and scheme of refining in soap-alkaline medium are widely used.

The alkaline refining of cottonseed oil. Cotton oil contains gossypol and its changed gossypol fractures, as it creats difficulties to the refining process. Changed gossypol fractures have the ability to swiftly absorb the spectrum. They do not even react with concentrated alkaline because they do not have acidic functional groups.

One of the key features of cotton oil is its color. The color of refined cotton oil on the GST(DST) is measured by the red unit of constant 35 yellow units; according to that, the following types of oil are distinguished: high-grade 7, first-grade 10, second-grade 16.

Therefore, refining of cottonseed oil does not only eliminate free fatty acids, but also eliminate gossypol. If oils are derived from I and II grade good seeds, then the gossypol may be in low rate and its refining can be accomplished by conventional alkaline recycling. When processing IV and lower-grade seeds, the resulting fatty acids are characterized by high numbers of modified gossypols. Such oils can not be reduced once by alkaline neutralization. Therefore, finding new methods of refining is not suspended, to obtain cheap, clear oils from low-grade cotton seeds. When processing cottonseed oil with anthranilate, the anthranilic acid reacts with gossypol and its derivatives, such as gossifosfatids. As a result, the products are poorly soluble. The precipitated products obtained after filtration are called anthranilate gossypol. Using anthranilate acid can extract up to 90% gossypol and its derivatives from oil or missile. Anthranilate gossipol residue and unreacted anthranilic acid are eliminated by alkaline neutralization. The amount of used anthranilic acid is calculated as 0.53% for each 1% gossypol.

After removal of gossypol with anthranilate, the color of the oil reduces about 2 times the amount of gossypol reduces 5-10 times, the acid number reduces 0.5-1 mg and the phosphatides are reduced by 3-6 times.

There is present 0.1% to 2% of gossypol and its compounds in unrefined cottonseed oil, which causes diminishing of the color of the oil.

Gossipol reacts with sodium to form sodium gossypolyta. It melts in water and easily separates from the fat. Products made from gossipol change are separated by soapstock absorption.

Rjexin has developed a method for separating gossypol from cottonseed oil. In this method cottonseed oil mainly treated with anthranilic acid, and non oil-soluble antranilate gossypol is formed.

If the amount of gossypol in the oil exceeds 0.5%, it is treated with anthranilate. This process can be done in oil and missile.

Technological scheme of periodic refining (Fig. 8). The refining black oil falls into the scale (1) and falls to the tank (2). It is supplied to the reactor-turboiler (4) via the black oil pump (3). The calculated amount of oil is given to the reactor-turboiler (4) from the tank which stands on the scale (8), where it is mixed with the oil. The mixture of fat and alkaline which mixed in the reactor-turboulierizer, falls into the neutralizer (5). The mixture in the neutralizer is heated with stirring. Mixing is continued until the soapstock begins separating. The heating is carried out at 60-70 °C. Then neutralize is defecated. Defecation takes up to 6-8 hours. In the case of slow defecation, neutralizer is slowly fed with 8 to 10% of the to 95-100 ° C of the heated salt solution from container (9) (relative to the 2-3% fat mass). Then the neutralization mixture is divided into three layers. Top-neutral oil, middle-soapstock and low-salt solution.

After neutralization, the neutralized oil is given from the neutralizer to the washing machine (7) through the groove. Here the oil is washed with water. The part of saline solution is given through the oil separator (15) to the sewage. The soapstock falls from the neutralizer to the container (6). Because of the large amount of fat in the upper part of the soapstock (oil-filled part), it is collected into the container (11), where the oil is separated and returned to the neutralization of the first stage of the process through the pump (12). To remove soap from neutralized oil, it is washed thoroughly. To wash, the oil is heated up to 90-95 °C in the device (7) and washed with hot water or condensate. Water temperature should be 90-95 ^{0}C. The volume of water taken to be washed is 8-10% to the fat. Wash 2-3 times. In the first wash 8-10% of salt water is used. The water which is used for washing will fall from washer (7) into the oil separator (15). There are left some amount of water in the oil. Therefore, after washing the oils, they are dried in vacuum at 100-105 ^{0}C. The residual pressure is around 40-60 mm. Drying is also carried out in the device (7). The vacuum is formed by means of a vacuum piston pump (13) and a tube pulley. The water used for washing goes down to the outside oil separator (17) through the inside oil separator (15). Here the sulfuric acid is added to the oil separator (17) from the container (16). The separated oil is collected and dispatched to technical points (18).

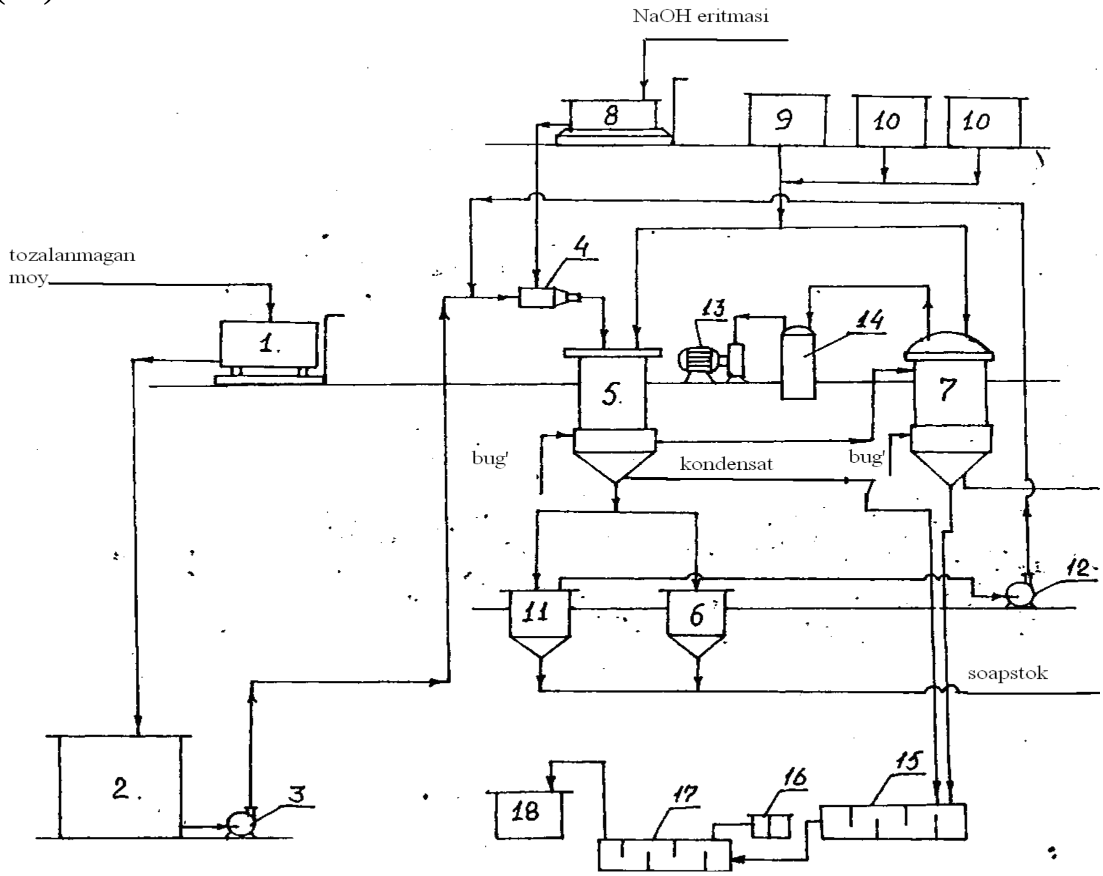

Figure 8. Technological scheme of periodic refining processes

Periodic neutralizer (Figure 9). The oil gets into the apparatus and heated up to the required temperature using the steam jacket (1). Then mixed with the mixer (2). The sprayer (4) gives a calculated amount of alkaline solution, which is heated to a predetermined temperature and they are stirred for 20-30 minutes. Then the oil temperature is reduced and the mixing is continued until the soapstock starts to sink well. The soapstock separates out of the oil by drowning. The oil is fed to the subsequent recycling via the groove (5). The soapstock is separated by a handle (6). The shower (3) is used to give the appliance water or salt water.

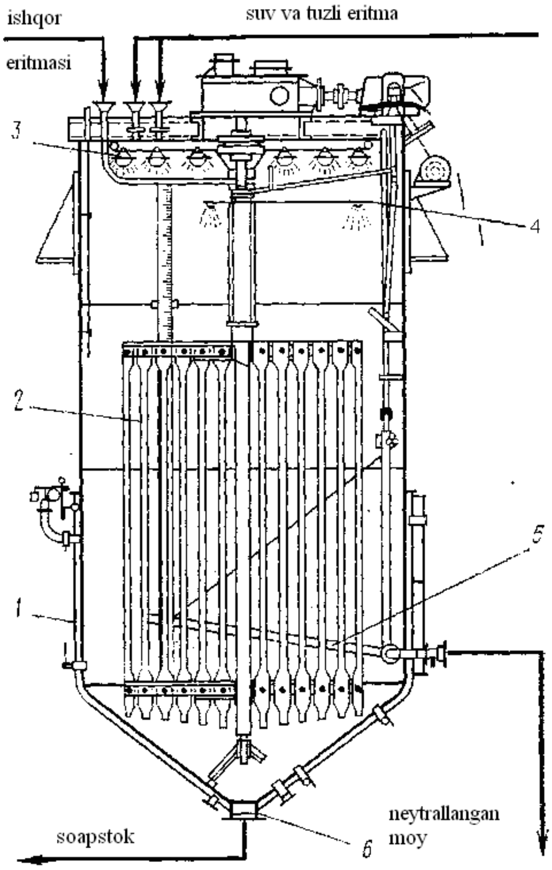

Figure 9. Periodic neutralizer

Periodic wash and vacuum drying apparatus (Fig. 10) It is used vertical cylindrical type vacuum drying apparatus for neutralizing and drying of neutralized oil. It has a steam shirt (2) body (1) and the working pressure of the heater vapor is 0.3 MPa. The mixer (3) in the apparatus is rotated by means of the engine (7), the reducer (8) and the val (6). The apparatus includes a spherical lid 9, a display window (10), a thermometer (11), a condensate sprayer (12), and patches for oil and water removal. (4,3).

During the washing process, condensate with 90-95 ^{0}C is used, and moisture content of dried oil should not exceed 0.2%.

Technological scheme of continuous refining of cottonseed oil with emulsive way (Fig. 11). After processing with anthranilate acid (if required) unrefined cottonseed oil is delivered to the container (2) by means of automatic weighs (1). It sends to the heat exchanger with two pipes (4,5) by means of pump (3):

It is cooled by water in the first heat exchanger (4) and it is cooled by salt water in the other one(5) to 25-30^{0}C. The cooled oil returns to the reactor-turboiler (6).

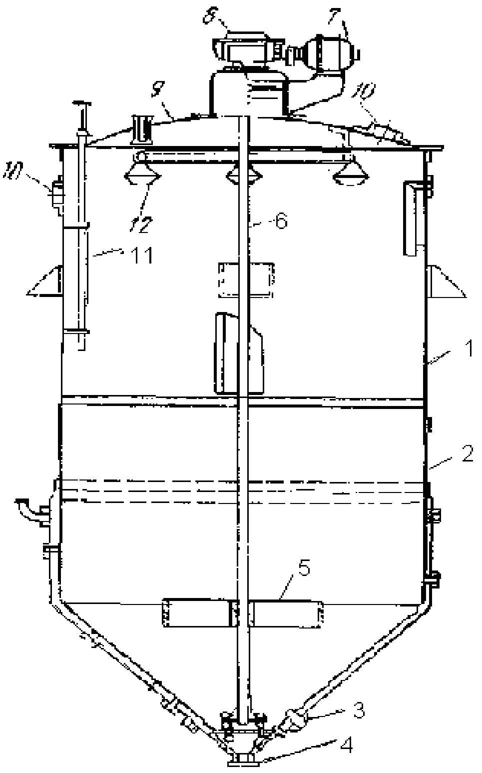

Figure 10. Periodic wash and vacuum drying apparatus

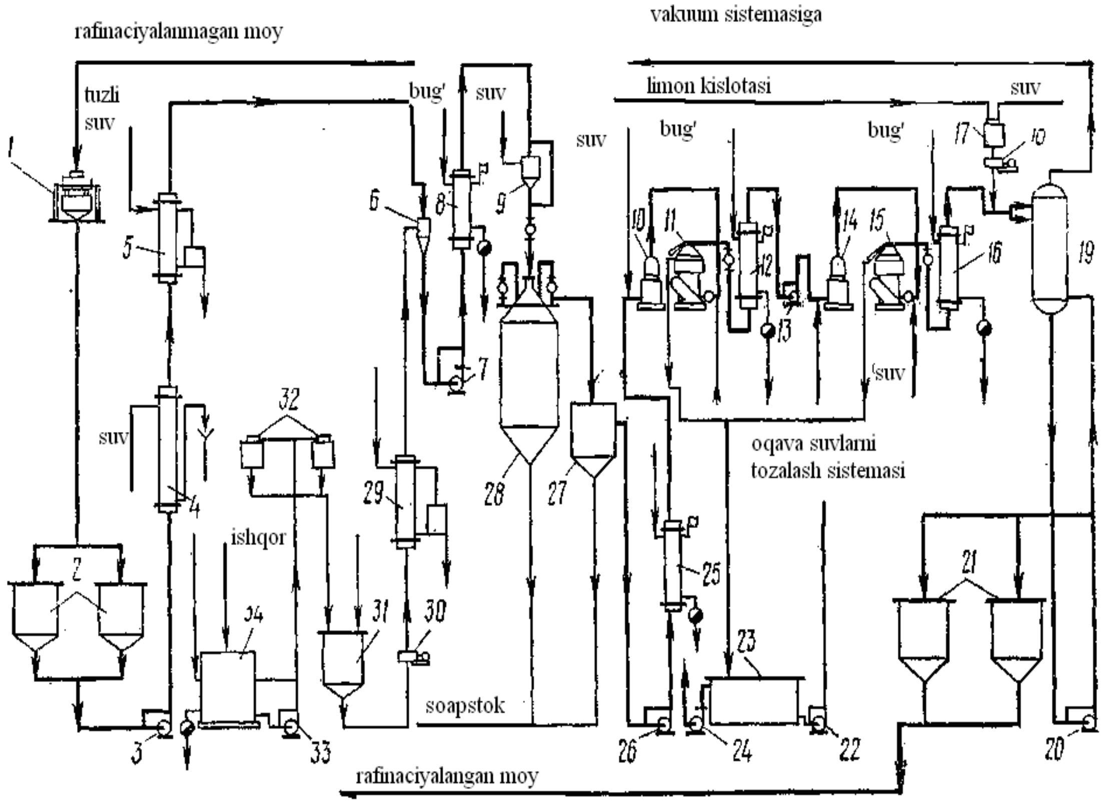

Figure 11. Technological scheme of continuous refining of cottonseed oil with emulsive way

The concentrated alkaline solution is pumped out of the tank (34) by means of pump(33) through the filter (32) to the (31) tank, which also transfers the saltless water in it. Alkaline solution is pumped to the reactor-turbulizer the with pump dosaser (30) through the cooler with salty solution.

The resulting compound is brought to detachable separator apparatus (28) through the heater(8) by means of the pump (7) to separate phase (where heated to reduce the viscosity of the soapstock to 65-70^{0}C). The oil is continuously poured into tank (27), where it is further defecated.

Separated soapstock in the tank is dispatched with the main separated soapstock to process. If necessary, mixture is mixed with water in the mixer(9) before pouring into the detachable separator apparatus. The oil is continuously fed to the knife mixer(10) from tank (27) with a pump (26) through the heater(25) (heated to 85-90^{0}C) and supplied with water at the same time. The mixture is separated in the separator(11). The oil is sent to a knife mixer for the second wash through heater (12) by means of pump (13) and it is separated in the separator (15) . Washing water removed from the separators (23) comes to the grease holder.

The separated oil is pumped to the tank(2) with pump, and the water is pumped with pump(22) into the cleaning system. The oil comes to the heater (16) and then to the vacuum dryer (19). Before drying, the oil is mixed with a solution of citric acid, which is prepared in the tank (17). The oil is pumped from vacuum-dryer (19) to the tank of rafinated oil (21) with pump (20). Refined cottonseed oil should have the same values as in Table 7.

Table 7

Indicators of refined oil

Indicators	Highest quality	I quality
Color, in red alliance, in 35 yellow, not more	7	10
Acid number, mg KOH, not more	0,2	0,3
Humidity and volatile substances, %, not more	0,1	0,2
Flashing temperature of extraction oil, ^{0}C, not less	232	232

Table 8

Concentration of an alkaline solution and its excessive amount

Type of oil	Acid number, mg KOH	concentration of the alkaline solution, g/l	Excessive amount of oil to the fat mass. To get the following color oils, in %		
			7 r. all	12 r. all	16 r. all
Forpress	up to 4	125-180	0,3	0,5	-
	up to 7	250-300	1,0	0,7	-
	up to 14	300-400	-	1,2	1,0
Extract	up to 4	150-250	0,6	0,5	-

ion					
	up to 7	250-300	0,6	0,5	-
	up to 14	350-450	0,5	-	-

The concentration of the alkaline solution and the excess alkaline content in the refining of cottonseed oil are chosen from Table 8, depending on the method of production of oil and the number of acids

There are a lot of waste of oil in the soapstock, in refining cottonseed oil. The coefficient of neutralization varies from 3 to 6 depending on the quality of oil, and the fat content of the soapstock is 30-40%.

After removal of the soapstock, the amount of soap in the oil will be 0.3-0.5%, which in turn requires several time of fat washing.

Test questions

1. Why is it required the excess amount of alkali?
2. The amount of waste depending on the refining method and the oil content.
3. Neutralization methods.
4. Loss of soap and moisture from neutralized oil.
5. Alkaline refining of cottonseed oil.
6. Scheme of oil refining.

6-LECTURE
ADSORPTION CLEANING

Plan: Purpose and essence of the adsorption process. Requirements for bleaching soils. Activated bleaching soils. Flow chart for batch bleaching of oils and fats. Process flow diagram for continuous bleaching of oils and fats.
Drying and bleaching equipment. Equipment for periodic drying and bleaching. Continuous vacuum drying equipment.

Key words and phrases

Adsorbent; Color of oil; Pigments; Gossypol; Carotenoids; Activated soil

Oils have pigments and they dye fats. For example: xanthophyll gives yellow color to the fat, B-carotene is red, chlorophyll - green; gossypol - brown or black.

Carotenoids are resistant to alkali, so it does not separated in alkaline refining. When the concentration of the solution is high, the carotenoids are sorbetazed in the soapstock during the neutralization process and the fat is partially bleached (clarified). Carotenoids are active sorbetazed on the surface of the solid sorbent.

Chlorophyll, in contrast to carotenoids, reacts with alkali to form a compound. However, it does not break out in alkaline refining. Sunflower oils contain carotenoids and chlorophyll, while cotton oils also contain gossypol. Purified oils and salomas should be clear, which is a very important factor for the production of margarine. An adsorbent purification method is used to remove fatty dyes.

Adsorption is the process of collecting molecules and atoms of another matter on solid or liquid material. Adsorption acts under molecular forces of active centres on adsorbent surfaces, it reduce the surface energy of them. Good adsorption depends on the nature and composition of adsorbable substances. For example: unpolarized (low-polar) compounds are better fed in unpolarized adsorbents (coal) and polarized compounds are well-fed in polarized sorbents. The nature and structure of all dyestuffs in oils are different. But each one has its own polarity. Therefore, adsorbent refining refers to polar adsorbents with selectivity and activity. For this purpose, the activated soil is used. These soils are derived from natural bentonite soils - alumosilicates.

The adsorbents used in the oil refining industry need highly adsorption capasity and active, mature surface, not large oil capasity, shouldn’t react with oil and easy separation from the fat. In the oil refining industry use activated soil-ascanit which is processed in FIC (MDX), its fat content is 75%. The amount of sorbent depends on the amount of dyestuffs in the oil, which varies between 0.5 and 5%. The effectiveness of the whitening process is determined by the color of the fat, the amount of sorbent which is used, the amount of waste and the excreting amount of bleached oil.

When using activated soil during the whitening, there is a slight increase in isomerization and formation of some glycerides. This will reduce the quality and duration of storage of bleached oils while storing. The above states and oil capacity require reduce the amount of used activated soil to justify as much as possible. The bleaching time is 20-30 minutes. Keeping the oil with adsorbent for long periods of time leads to its oxidation and oil gets earth taste. Hydratified, neutralized, washed and dried oils are recommended for bleaching. The process is carried out under vacuum to reduce oxidation during the whitening process. There have been installed hermetic filters with different designs and with mechanical sediment removing equipments in our and forein countries in recent years, as well as continious bleaching methods are on the way.

The bleaching procedure for all methods is as follows:

- preparation of fatty acid suspension of adsorbent;
- Deaeration, whitening process;
- Remove the adsorbent with the filter
- Temperature is 75-80 ° C in the whitening process, residual pressure in the whitener 4 kPa (around 40 mm on mercury column).

Various devices (De-Smet, Alfa-Laval, Speshim, Okrim, etc.) are used in oil refining in the FIC(MDX) and overseas.

Requirements for whitining soil. Sorbents must meet the following requirements:

1. They have high adsorption ability and they should utilise less, as well as should give high adsorption refining results. The activity of adsorbent which are used for whitening the oils and fats characterized with bleaching factor F_0 and it is equal with the ratio of bleached and non- bleached oils.

2. This indicator more than one in oils which are bleached with sorbents. If the indicator of the bleaching factor is high, the sorbent is activated. Sometimes the degree of whitining is expressed with other indicators. For example: the color of bleached and non-bleached oils is compared to a different concentration solution of iodine or detected as a combination of red and yellow color combinations in the luminaire.

3. Sorbent should have low oil absorbtion ability (adsorbtion ability of oil is residual persentage % of oil which is left in it) . Used sorbent should completely and easily separated from the oil. It shouldn't make chemical effect to oil and shouldn't left odour which can not be cleaned.

4. Sorbent should be easily separated from the oil by a technical method, such as filtration. To increase the effect of bleaching, the mixes of whitining soil and activated charcoal, WS and ACh are used.

Activated bleaching soils. To artificially activate the soil's ability to whiten they are heated up to 250-300 °C or treated with acids. Activation of bleaching soil with acidity gives a good result, and this method is more commonly used.

As a result of melting of metals Mg, Fe, Al, Ca and due to mineral acids in the soil, there is increases the porosity of the soil, the active surface grows, and formation of cremoacides increase the soil activity. Then HCl or H_2SO_4 with a concentration of 30-35% is added it is about 10 to 15% of the fat mass,.

In order to activate the soil with mineral acids, the raw soil is cleaned, crushed, then put into the tank and prepare 25% suspension with water, as well as it pumps into the container through the filter. HCl provides better results when used, but H_2SO_4 is very common because it corroses less the device. After adding the acid, there is added steam to the product and heated to 100-105^{0}C and left for 1 day. Salty water is supplied to the sewer with neutralization. The deposition is transferred to the filter and it is washed with water and removed from the acid. Then dried at 100-110 °C until 5% moisture content. Dried soil is crushed, ground and packed into kraft pots. The bleaching capacity of the activated charcoal is doubled.

Technological scheme of periodic bleaching of oils (Figure 12). The oil is taken out of the tank (1) by vacuum (3) to the vacuum cleaner, heated to 90-95^{0}C. It is dried under residual pressure 40-60 (mm.mercuries column). Then the soil is taken away from the measurer(2). The soil is mixed with oil for 20-30 minutes. At the end of the process, the oil is pumped to the filterpress (5) with the pump(4). The dim oils are collected in the oil collecting container, and the clear oils are collected in the collecting container (6). The pressure in the filter should not exceed than 2.5-3.0 kg / cm^2 and temperature than 85 -90 °C. The used whitening soil contains a certain amount of oil. In order to reduce the amount of oil which is contained in soil, the filtrpress is bubbled with compressed inert gas. The oil which excreted from filtrpress is dispersed to alkaline refining.

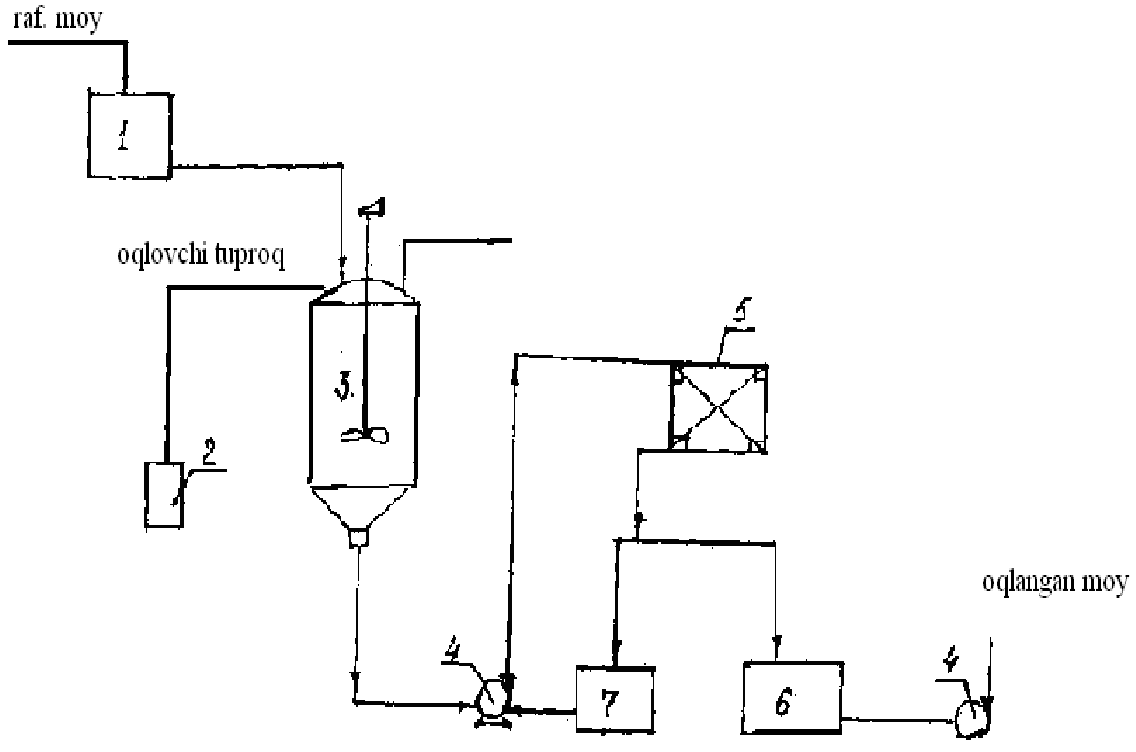

Figure 12. Technological scheme of periodic correction of oils.

Description of the technological scheme of continuous bleaching of oils on the De-Smet firmware device. (Figure 13). The neutralized, washed and dried oil falls into the tank(17) and it is pumped to the bleaching by means of pump(16). A portion of the oil passes into the mixer(14) through the measurer(3), without touching the heater, where it is mixed with the whitening soil. The whitening soil continuously comes to the bunker,through a dosing pad (15).

The suspension is taken away to whitening and deaerative apparatus (4) with vacuum. There are dispatched main part of the oil through the measurer (2) and the heat exchanger device (1). The suspension is sent through the bottom end of the apparatus (4) and through the heat exchanger apparatus (5) to the last bleaching device(6) by means of the pump (13). Here, with the help of adjuster, the levels of an oil suspension are kept constant. The vacuum is produced by steam-injection pump(7), bleached oil is pumped to the disk filter (8) with the pump(12).

There are 2 filters installed for continuous operation. The first fractional part (6) of the filter is returned to the whitening apparatus. The quality of the filter (9) is monitored by means of the monitor. Clean, clear oil will be sent to post-processing. When a certain amount of sediment is collected in the filter, its capacity is reduced, when the pressure rises to 0.35-0.38 mPa (3.5-3.8 kg / cm^2), filtering is stopped. 2 – filter is enabled and 1- filter is switched of. When the filter is switched off, the remaining oil (11) is poured into the tank. It returns to pump filter (12). The sediment on the disk is first blowed with steam, then blowed with hot air to make fat free the sediment. The water - oil mixture is poured into the tank (10) where the oil is defecated. The sediments in the disc are dropped. The bleached oil with production capacity of 5 t / h.

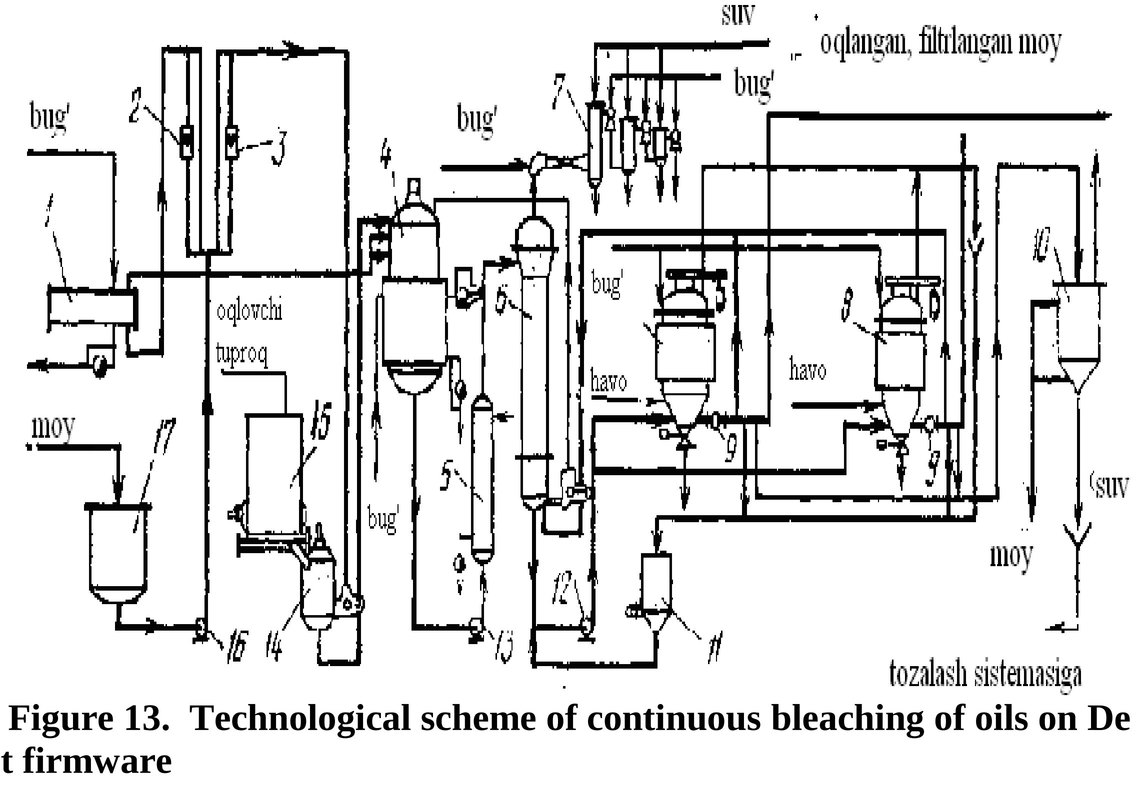

Figure 13. Technological scheme of continuous bleaching of oils on De-Smet firmware

Test questions

1. Bleaching of oil-adsorption refining.
2. The essence of the whitening process
3. Oxidizing adsorbents.
4. Requirements for adsorbents.
5. Methods of whitening of oils.
6. The need to bleach the oil.
7. The ingredients in the oils.
8. Adsorption - What is it?
9. Amount of soil content of whitewashing of oils.
10. Technological scheme of periodic whitening of oils
11. Technological scheme of whitening oils on De-Smet firmware

7-LECTURE
DEODORIZATION OF OILS AND FATS

Plan: The purpose and essence of the deodorization process. Description of substances emitted during deodorization. Ways to implement the process. The role of steam, vacuum, temperature. Periodic and continuous deodorization. Technological scheme and technological modes.
Deodorants of periodic and continuous action. Technical description of the equipment. Deodorants De-Smet. Deaerator. Drop separator.

Key words and phrases

Deodorization; Volatile substances; Aromatic substances; Vacuum; Vapor pressure; Deaeration; Fertilizer; Citric acid

The final stage of the refinement process is deodorization (odourlessness), the purpose of deodorization is to destroy the bad taste and odour of oil.

Taste and odour is created by complex mixture of oils. These substances include free fatty acids, glycosylated fatty acids (caprile, caprone, etc.), aliphatic hydrocarbons, natural ether oils, aldehydes, ketones, oxy acids and others. The toxic silicates are also lost during the deodorization.

The essence of the deodorization process. Deodorization is one of the methods of distillation. The deodorization process consists of three stages: the passage of the smelling agent from the liquid layer to the evaporative layer; evaporation of odoriferous substances; removal of evaporated molecules from the evaporative layer.

Volatile substances consist of a complex of various ingredients in different quality and quantity content. They have more vapor elasticity than triglycerides, which means volatility. The effectiveness of the deodorization depends on the composition of the smell, the volatility and the process temperature.

The volatility of the smells increases with the rising temperature and the vapor tension increases. If the temperature is too high, it will cause polymerization and oxidation of fats. If the temperature exceeds 250^0C, thermal decomposition of fat increases and the fat loss is increased.

In order to reduce the temperature in expulsion aromatics, the process of deodorization is carried out under vacuum, under vapor pressure.

The quality of the fat, intended for consumption, depends on the complete and unconditional implementation of the process of deodorization. Therefore, deodorization is one of the main processes for cleaning up the fat. The purpose of the deodorization of fats is to purify the fat from the smell and the taste. These substances are well soluble in oils and have high molecular mass and low vapor pressure. Vapor pressure of the volatile substances is close to the fatty acid’s vapor pressure. Due to low amount of volatile substances and free fatty acids as well as low steam pressure, their solutions are ideal and their steam phase is subject to Dalton's law.

Significant sign of deodorization is free steam which is given and time of deodorization. These factors, in turn, depend on the pressure of deodorizator, the amount of deodorizated oil, and the initial and final concentration of the smells. The equipment is supplied with open steam by mixer and other steam dispensers. It provides intensive mixing of the liquid, reduces overheating. Distillated steam in form of tiny bubles and oil, forms a mixture of vapor and oil in the form of small bubbles. Therefore, the odoriferous substances are diffused from the oil droplet onto the surface and mixed with water. As a result, the deodorization process is accelerated and facilitated. Most deodorizators are responsible for the removal of odourous substances in the film layer. Decrease of the pressure of deodorization process, decreases the boiling temperature of the ingredients and the free vapor is depleted. Deep vacuum allows to crush steam bubbles; with the expanding of working surface of bubbles, it's volume is rises. As a result evaporation coefficient increases. Vacuum has a significant effect on duration of deodorization, fat quality and steam consumption. Another factor influencing the quality of the finished product is the condition of the deodorization process and the device design. For each oil and fat type, there is a different optimal deodorization temperature. It depends on the composition of ingredients of smell. The coconut, palm kernel and other oils with low molecular weight odour content is relatively lower than sunflower oils, salomas and other oils.

Deodorizators should be insulated, since the vapors of the smell must not be condensed and returned to the deodorized oil. In order to reduce the oxidation of fats, it is deaerated at a low temperature at first.

To increase the stability of deodorized fat, it is added antioxidants or synergists, primarily citric acid. They reduce metal activity and prevent oxidation as the catalyst.

In some cases smells and taste appear in the fat again. If the deodorization process is carried out in full compliance with the technological regime, the odour and taste will not occur again. When all conditions are met properly, the deodorized oil will have excellent organoleptic parameters.

Since the amount of individual volatile substances in fat and free fatty acids are unclear, the liquid phase (fat) is considered to be composed of two components, i.e., triglyceride and free stearic acid. Therefore, the deodorization process is controlled by the reduction of stearic acid. In experimental studies, if the amount of stearic acid in the deodorized oil is up to 0.02%, the fat is odourless.

Technological conditions of deodorization. In industrial deodorative devices, the expulsion process of smells is carried out on a thick layer then on a film or primarily on a film and then on a thick layer. Deodorization is carried out periodically, partly continuous or continuously. In the periodic deodorator, the fat layer on the steamer is large and the contact with the steam vapor depends on the speed or pressure of the steam which is supplied to the deodorizer. However, steam rate is limited, and if the steam is given in a high speed, the oil release with steam from the deodorator will increase, as well as losts will increase. Due to the fact that the steam and oil contact in thin layers, in plates, in lamella in continuous deodorators, it is easy to balance between the vapor and liquid phase and to produce the same steam.

In addition to the general requirements for high quality deodorized oil (high temperature, deep vacuum), the following requirements must be met:

1) during deodorization, it is necessary to keep the oil at high temperature for as short time as possible;

2) oils should be deaerated before deodorization;

3) avoid contact the oils with damp air during heating, deodorization and cooling;

4) After the deodorization has been completed, if the equipment is stopped, the oil must be released and all the parts of the equipment should be washed.

For the deodorization of fats, various deodorators are used:

1. Periodic deodorators.
2. Continuous deodorators (A1-MND, De-Smet, Alfa-Laval).

During the period of continuous deodorization, the temperature should be 170-210 ° C, and in the continuous process up to 230 ° C. The residual pressure on the apparatus is equal to 5mm mercury column. Multipurpose vapors (vacuum pump with vapor injection) are used to create vacuum.

The driving force of the steam engine is that the steam speeds can reach up to 1000 m / sec. At such a high speed, the steam takes away the vapors and gases in the chamber and goes into the condenser and condensed. A new steam and gas comes from the deodorizer. Thus, vacuum is formed in the system.

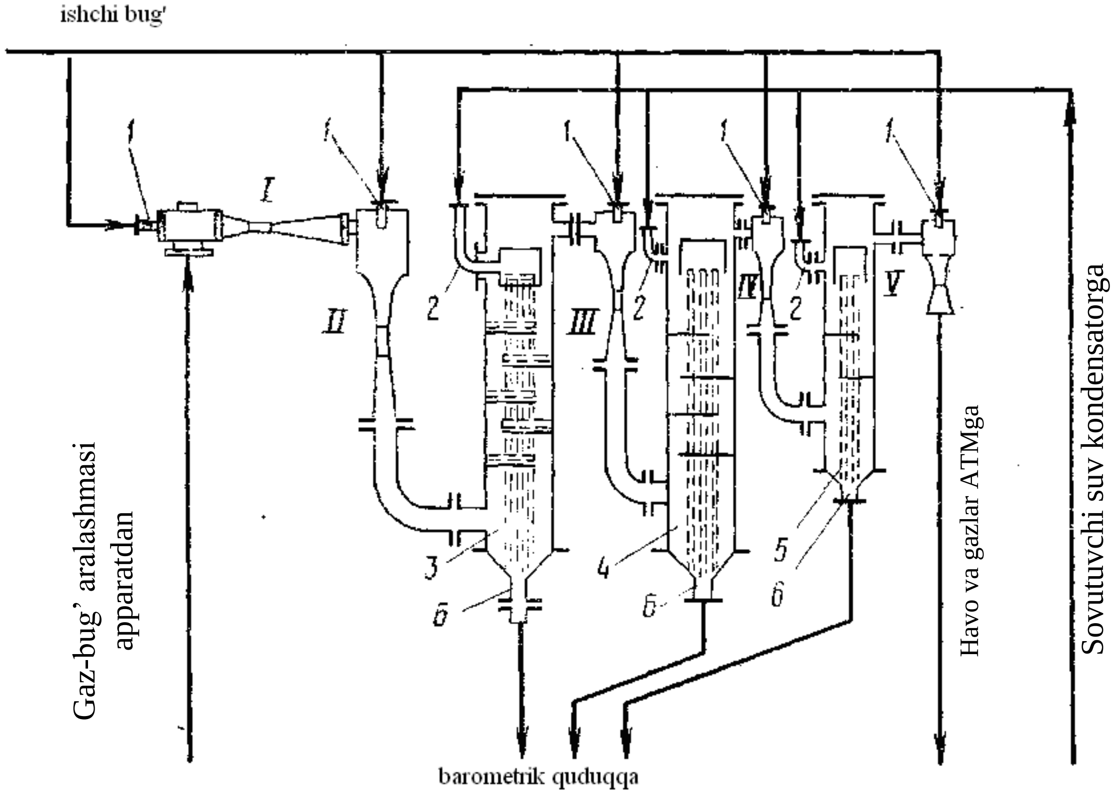

Figure 14. A five-stage steam injection vacuum pump scheme

Figure 14 depicts a five-stage steam ejection vacuum pump scheme with five ejectors and three aqueous condensers. The peculiarity of this device is that the I and II phase steam vents are connected serially without interconnecting condensers.

The five-step block works as follows. Work vapors are given simultaneously through nozzle (soplo)(1) at the same time, cooling water is supplied to all capacitors(condenser) by means of branch pipe(2), the water used in capasitors goes along barometric trumpet falls into barometric draw-well by the branch pipe(6). The steam-gas mixture comes to the first stage of the ejector, where it is pressurized to 0.8-0.8 kPa (6 mm mercury column) through a working vapor of 0.13-0.26 kPa (1-2 mm mercury column). Then the vapor mixture passes from this ejector to the II stage ejector, where it is pressurized down to 4 kPa (30 mm mercury column) depending on the coolant temperature.

The resulting mixture of vapors is condensed in the condenser(3). Uncondensed vapors go into phase III of the ejector and compress it to 16 kPa (20 mm mercury column). After condensation in the condenser (4) the remaining vapors enter the IV level ejector where it is compressed to 48 kPa (360 mm mercury column). Then it is condensed in the third (5) condenser and come into V-phase ejector. Here, it is pressed down to the atmosphere pressure, and it emerges in the atmosphere.

Fat and oils should be thoroughly dried prior to deodorization. Soaps and soils should not be in the oils which are given to the deodorization. If there is residue of soap or whitewash soil in the oil it should be recycled. In order to improve the quality of deodorization, there added a solution of citric acid to oils. Citric acid prevents oxidation of oils. The steam which is given to deodorization must not contain salt, oxygen and other gases and the steam should be dry and neutral.

Technological scheme of periodic deodorization (Figure 15). The refined oil is pumped from tank(1) through the vacuum to the deodorizer(4). The deodorizer, before working, vacuum is formed, and with the vacuum the deodorator is filled with fat by half. The oil is heated up to 100 °C and the deodorator is supplied with a free steam at the bottom. When the temperature reaches 180 ^{0}C, the required amount of steam (250 kg / hr) is given. Rise of oil temperature up to 180^{0}C should not exceed than 30 min. Vacuum on the apparatus is generated using the ejector block. The residual pressure on the device should not exceed 0.65 kPa (5 mm mercury column).

The deodorization temperature is about 180^{0}C for coconut oil, for salomas and other vegetable oils about 210-230^{0}C.

When deodorization is completed (deodorization time is 1.5-3 hours), the deodorized oil is supplied to the cooling fan (5) for the cooling. In the refrigeration unit, the oil is cooled by water, and deodorized oil is pumped to the tank for oils with pump(6). The vacuum is generated using a ejectors block (7) in the system. The steam mixture from the deodorizer is passed through the droplet holder (3) to the vacuum system. The oil droplets held in the droplet holder (3) are collected in the drop collector(2).

The water supplied to the ejector system capacitors is continuously fed to a barometric well (8). To maintain the quality of deodorized oil, it is added citric acid solution (20%) in the deodorization process, in the amount of 0.6 liters of for 1 t fat. Efficiency of this method is 20-25 tons per day.

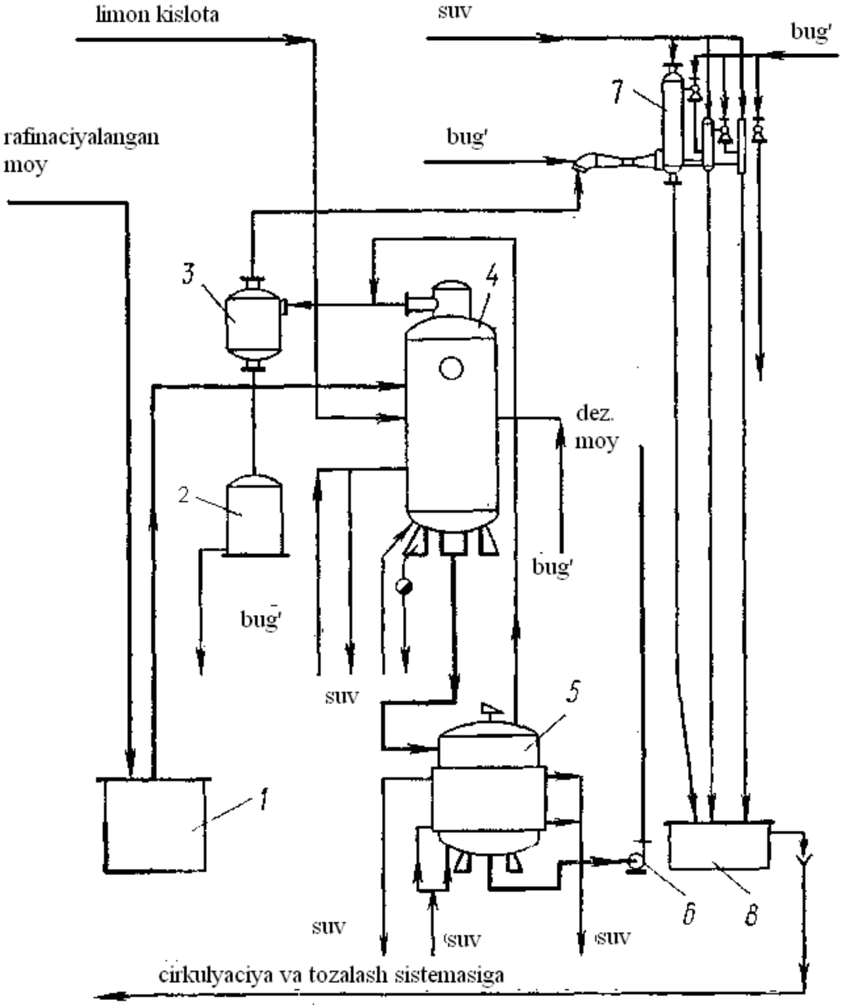

Figure 15. Technological scheme of periodic deodorization.

In the **the periodic deodorizer (Fig. 16)** oil is heated, deaerated, deodorized and initial cooled. The deodorator lid (3) has a steam-dome (2) attached to the branch pipe, which serves to remove the used steam with odoriferous substances. At the bottom of the steam-dome installed a drop separator (4), with which oil drops are held. The heating wall (5) is mounted on the outer wall of the device. It is used to heat up the condensation of volatile vapors in the wall of the apparatus. At the bottom of the deodorizer (7) the steam bubbler is installed. The apparatus has three two-lane coil-pipes (zmeevik)(6), each with a 10-12m^2 heating surface. The size of the heating surface allows the oil to be quickly heated up to 160-210 °C. These coil-pipes are also used to cool deodorized fat with water. The oil comes into apparatus by branch pipe(1) and exits by branch pipe (8). The deodorator has a total capacity of 10m^3 and poured into 5.5 liters of oil. The deodorator is equipped with a thermometer, vacuum meter and sampler.

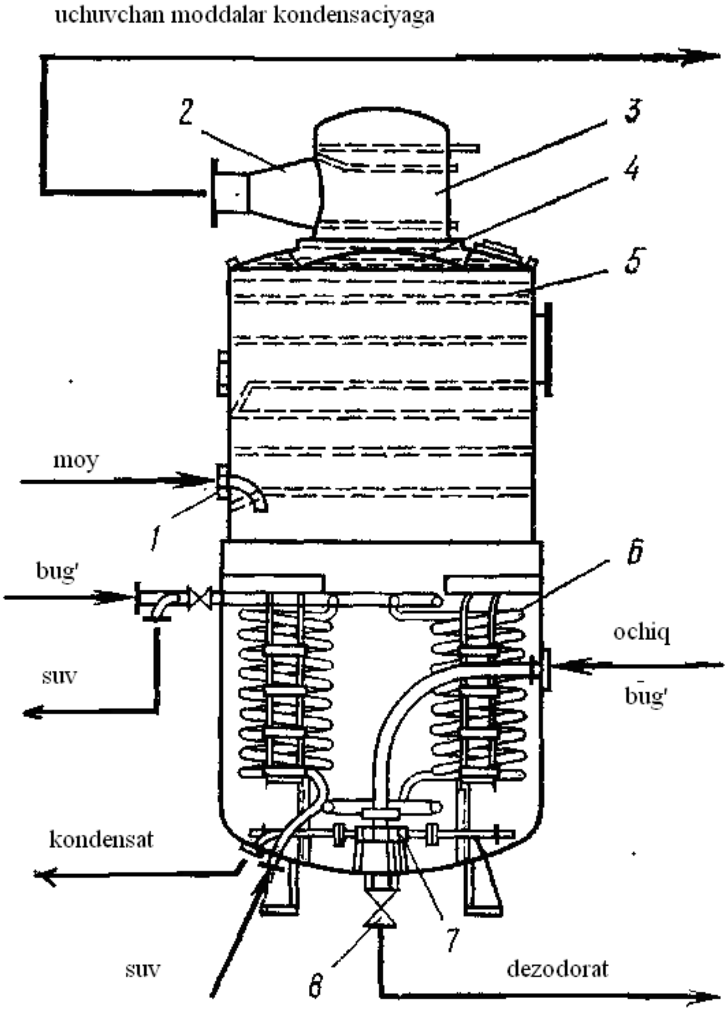

Figure 16. Periodic deodorizer

Technological scheme of the continuous deodorization on the A1-MND line (Figure 17). The oil from tank(1) is supplied to the deaerator (4) by the pump (2), where it is deaerated and heated with hot oil from the deodorizer. Then the oil is pumped with pump (2) to the heat exchanger unit (7) where it is heated to the odour expulsion temperature (180-200 °C) and goes into the deodorizer (11) through the filter (9).

The deodorizer is supplied with a solution of citric acid through measuring unit(10). The dezodorated oil is pumped to the refrigerator (8) with the pump (2) for cooling through the deaerator(4). The cooled oil is supplied to the oil tank (5) and it is directed for consumption.

The gaseous mixture is removed from the deodorizer (12) through the droplet holder by means of a vacuum pump (5) via the 5-stage vacuum ejector, and the water goes into the well from the condenser (3). The production capacity of the line is 3.3 t / h.

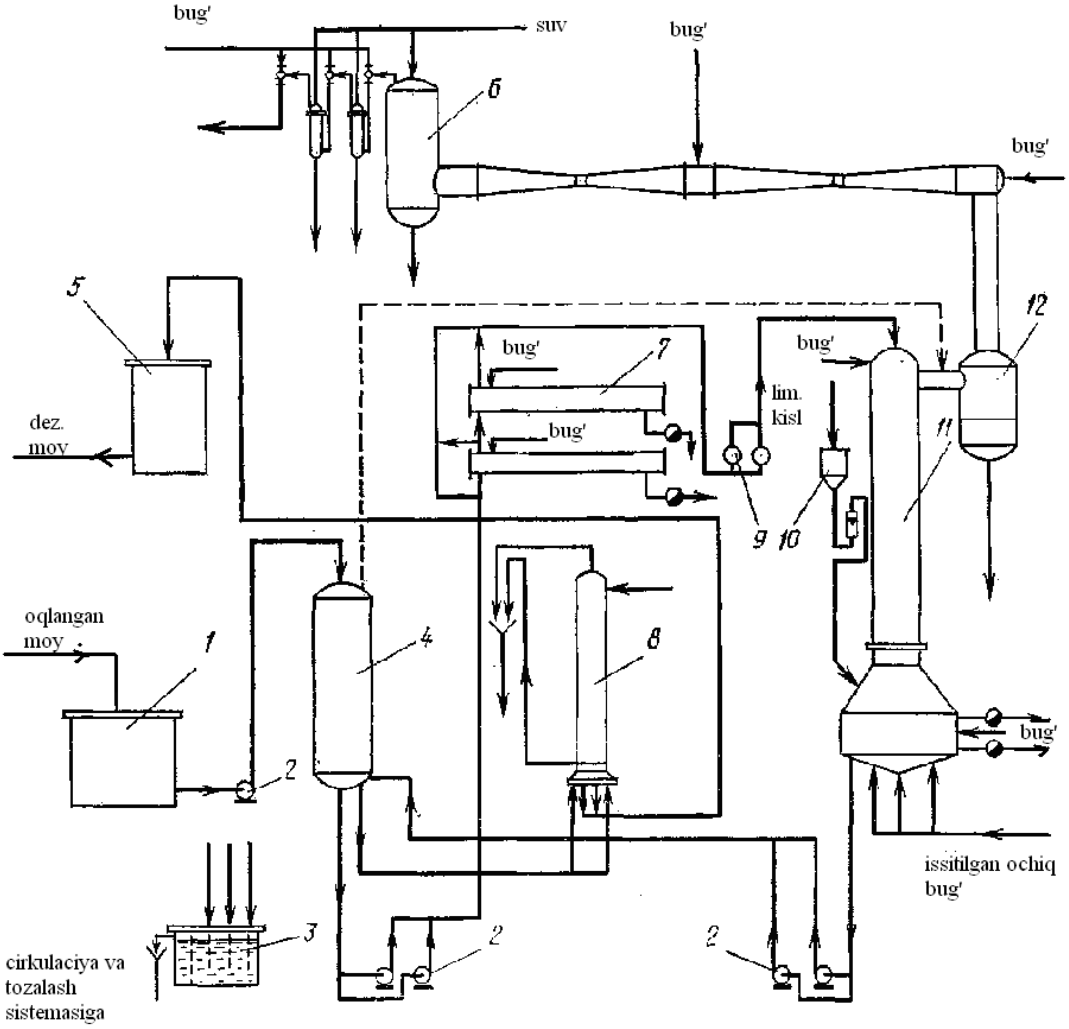

Figure 17. Technological scheme of the continuous deodorization on the line A1-MND

A continuous deodorizer (Figure 18) consists of two parts. The upper part (5) itself contains a cylindrical column. The oils come into deodorization tank from the upper part of the column through the sprayer (7). Inside the column, 38 split-shaped plates (6) are mounted and form a large surface. As a result, the oil flows down as the form of a film.

Distillatorda limon kislota kiradigan maxsus moslama mavjud. Apparat kislotaga chidamli zanglamaydigan po‘latdan yasaladi. Moyni apparatda bo‘lish vaqti 45 minut

The lower part (4) has a conical bottom and is divided with vertical flanges (11) into 7, central (10) and 6 radial sections. There is not barrier between the first and the sixth radial sections. Each section is fitted with a steam ejector. In the first, third, and fifth sections, the steam coil-pipes (9) are located and serve to heat up the oil. The oil comes to collecting gutter (3) from columns, then into the central portion (10). Then it moves again to the first radial section and passes through the same six sections. The oil is gone out from the deodorizer by release tube(4) in the section 6. The open vapor penetrates into the cube through the thickness of the oil, rises to the surface of the plate, saturated with evaporating substances and goes through the branch-pipe (8) to the droplet collector, and then to the vacuum system. There is a special device for lemon acid in the distillator. The machine is made of acid resistant stainless steel. The time of being in the apparatus is about 45 minutes for oil.

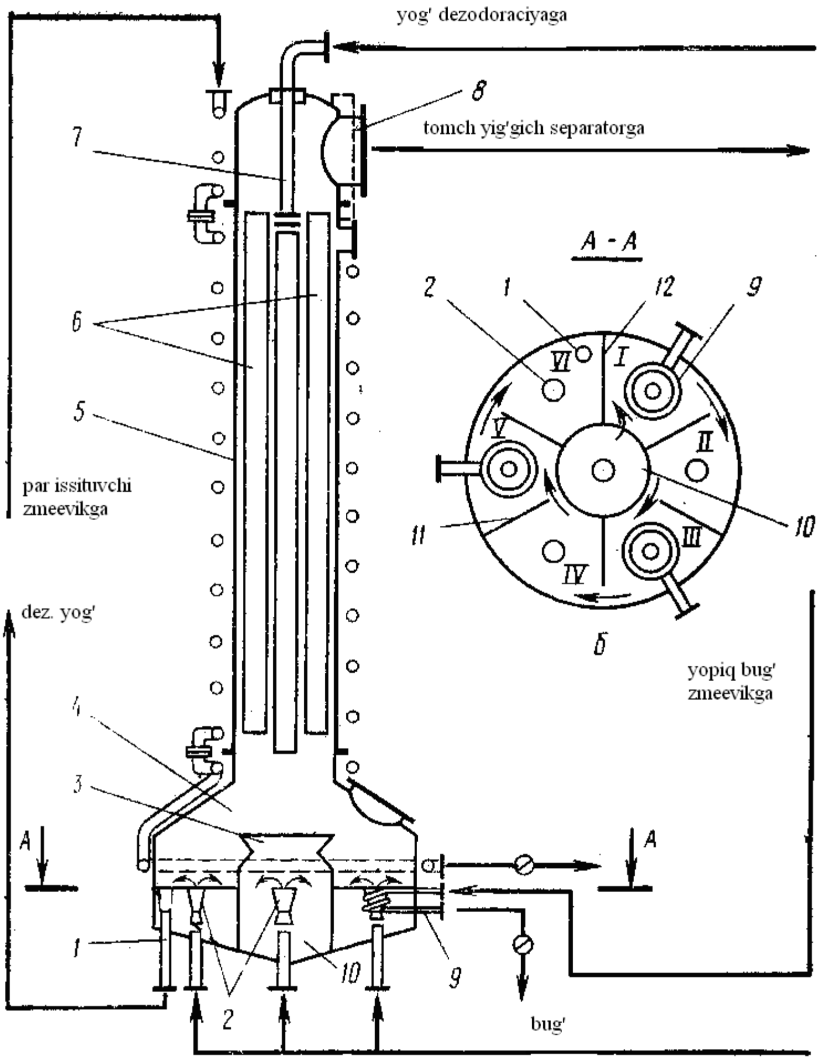

Figure 18. Continuous deodorizer

Refinement without alcali. Nowadays, the factors that influence the glyceryl of the fat have been determined in terms of reduction of temperature, air oxygen and other processes. Therefore, it is desirable to eliminate free fatty acids and fragrances by distillation by refining without the addition of alkaline to improve the quality of oils and hydrogenated oils.

Refinement of salomas without alcali. The non-refined salomas which is directed to the refining has the following characteristics: The number of acids does not exceed 1 mg KOH, the moisture content and volatile substances are not more than 0.2% and the nickel content is less than 10 mg / kg.

The process of refining without alcali is made in two steps: the first is to prepare the fat for the process, and the second to distill the free fatty acids and odours. The first step is to treat nickel and nickel soap in salomas with citric acid, formation of non-soluble nickel-lemon sulfate in salomas, then wash it with condensate, separation into phases, drying, adsorptive refinement to remove fatty acids, nickel soaps, nickel residues.

When processing salomas with citric acid, the temperature is 90^0C, the acid concentration is 5-15%, and the consumption of citric acid according to amount of the nickel is about 25-50 g / t. The amount of the adsorbent in the whitening is 0.4-0.5% relative to the oil mass.

The second step for nutritional salomas is take part in the continuous deodorization devices with additional equipped to hold fatty acids. Therefore, in addition to the first barometric condenser, the A1-MND and the "De SMET" charts are equipped with a condenser-holder, a collector of volatile substances.

Refining of oil without alcali. This method is effective for the processing of oils with acidity of 10% or more, resulting in to get refining oil with acidity less than 0.5% and distilled fatty acids. The basis of preparation for distillation is the deep hydrotation and bleaching of oils. Distillation refining is carried out on a number of devices. One of the most widespread is the line of the Italian company "Ganatssa".

Loss of fat and norm of refining waste. Norm of loss and waste standards in oil and fat companies are defined and approved by higher organizations. They are accounted for by devices, technological schemes and operating modes.

The main ingredients essential for refining at the refinery are oils and fats. The auxiliary materials include alkaline, citric acid, whitening soil, sulfuric acid and others. The cost of raw material expenditure is determined by the weight of the product depending on the ton of refined oil.

Technological losses and waste are due to the production process and directly depend on it. Organizational waste and losses are not dependent on technological processes. They are caused by the inadequate use of wastes, loss on the storage and transportation of raw materials, and natural losses. Inadequate products, as well as technological disruptions, excessive natural loss, and loss on inadequate technology and equipment are not included in the consumption norm of raw materials.

In the refinery, raw material, which is non-recoverable for use in the process of production, is waste. Losses are remains in the filter’s fabric, adheres on the device, spills on the ground, remains in the water and in the soil, and also oils that are formed during deodorization and drying.

The amount of waste in refining depends on the type, quality, purpose, refining method, and process mode of oil. Also, waste and loss depend on whether the oil is hydrated or not.

Determination of the amount of fat emissions at each stage of the refining.

Hydration. The calculation is based on the amount of phosphatides in the hydrated and non-refined oil.

The amount of the phosphatides F and percentage of wastes on hydration to mass of hydrated oil is determined by the formula below.

$$\mathbf{CH_g = K_g \cdot F.}$$

where: K_g - the coefficient indicating how many times the amount of waste large than the amount of phosphatides depends on the used phosphatide separation scheme.

The amount of waste to mass of non-hydrated oil on receiving phosphatide concentrate and on hydration of sunflower and soybean oil in the percentage, as follows : 1,7 F for hydride scheme using separators; for the hydride scheme using the defecation device. Here, 1.7 and 2 K_g coefficients corresponding to schemes.

Neutralization. The percentage of fat-soluble waste on soapstock to mass of non- refined oil is determined by the following formula.

$$CH_{yo} = K \cdot X$$

where: K-neutralization coefficient; X-acidity of neutralizing fat,%;

Washing. The wastes on the dirty water is collected oil which is held in the grease holder. These oils contain emulsifying agents and other compounds. Adding them to refined oil results in a breakdown in technological processes and increased waste. Therefore, such oils are collected and refined separately; if they are large, the amount of separate waste and losses will be determined for them.

Whitening. The wastes depend on the oil capacity of whitening soil, quantity and type of oil, and the oil filtering conditions. Waste (%) is determined by the following formula:

$$CH_0 = MA/100$$

where: A - is the amount of the soil, in% to the refined oil mass. M-oil capacity of soil (average oil capasity of soils is 40%).

On filters used to mechanically separate the sediment less oil and therefore, the amount of waste less 2 times than whitening.

$$CH_0 = MA/(2 \cdot 100)$$

Deodorization. Waste and losses are normalized depending on the type of fat. In coconut oil, large amount of loss due to the presence of low molecular fatty acids and their triglycerides relative to other fats. At the same time, waste is low than other oils. This is explained by the low concentration of volatile coconut oil in barometric capacitors from other oils. Table 5.1 illustrates the basic principles of waste and losses of refining schemes of nowadays.

Table 9

The norms of wastes and losses on refining oils

Refining stages	Method	In% to non-refined oil	
Hydration of light oils (sunflower, soybean, earth, macaroni)	When using the separator	1,7 F	—
	When using the defecator	2 F	—
Light oils	continuous	1,25 x	0,1
	periodic	1,5 x	0,1
For the purpose of food neutralization of cotton oil in emulsion	periodic	5,5 x	1,7
	continuous	5,2 x	1,7
	in micelle	4,3 x	1,7
for technical purposes	On all schemes of refining	4 x	1,7
neutralizing of food salomas	On the separated line	1,5 x	0,1
washing	—	0,2	0,2
drying	—	—	0,05
bleaching	periodic	0,4 A	0,1 A
	Mechanized filters	0,2 A	0,1 A
Deodorization			
coconut oil	—	0,05	0,30
other oils and fats	—	0,15	0,05

Test questions

1. The purpose of the deodoration process.
2. The essence of the process of " Deodorization"
3. The parameters of deodorization technology
4. Importance of vacuum in deodorization process
5. Flavors in the vegetable oils.
6. What is the effect of deodorization?
7. Temperature and pressure of deodorization process.
8. How is it detected that the fat is odourless?

8 – LECTURE

EXTRACTION OF WAXY SUBSTANCES

Plan: Extraction of wax substances in oils. Low-temperature fractionation, "freezing" - the main technological method of separating paraffinic substances in oils and fats, the physicochemical nature of the process.

2- MODULE. TECHNOLOGIES OF MODIFICATION OF OILS AND FATS

9 – LECTURE

HYDROGENATION OF FATS AND OILS

Plan: Theory of the hydrogenation process. The essence and purpose of the hydrogenation process. Mechanism and kinetics of catalytic hydrogenation of oils. The principles of heterogeneous catalysis in the liquid phase. Effect of a catalyst on the hydrogenation reaction and activation energy. Chemical changes during the hydrogenation of fats. Selective hydrogenation of unsaturated fatty acids. The nature of the catalyst and the effect of temperature on the hydrogenation rate.

Key words and phrases

Hydrogenation; Salomas; Selectivity; Isomerization

The demand of the national economy to oil products is satisfied by vegetable oils, animal oils, butter and others like these. Only some of the fats (butter and animal oils) are in a solid state, and most of the oils are in a liquid form. Vegetable oils are, however, vary according to climatic conditions at different points in the earth's crust. For example, in tropical countries, palm and coconut oils are solid. Sunflower, cotton, soybean, raps and other vegetable oils are produced in a liquid form. The need for solid fat is compensated by the production of hydrogenated salomas from vegetable oils. Solid oils are of great importance in the industry, they are the main raw material for the production of margarine, household and perfume soap, stearine.

However, in the FIC, natural hard oils are limited, and liquid vegetable oils are produced in a large quantities. Therefore, the liquid oils are hydrogenated and solidified. The hydrogenated product is called salomas. At present, two hydrogenation plants are operating in Uzbekistan. Hydrogenation is based on the saturation of unsaturated fatty acids of liquid fat. As a result of this process, unsaturated fatty acids are eventually transferred to saturated and relatively there is occur high-temperature melt oils.

The production technology of hydrogenated oils, as well as its chemical processes in a particular phase, are extremely complex. Therefore, it is important to study the theoretical foundations of processes that take place in the hydrogenation of fats.

In order for the molecule to react to the various substances, these molecules must interact, that is, they must collide with each other. However, only a very small number of such molecules, which are in a certain amount of volume, interact with one another in the desired direction, and come into contact with each other. This means that only few molecules have enough energy to change their bond and create new bonds, that is, to make a new compounding reaction. The minimum energy of such active molecules, which is sufficient to carry out the reaction, is called its **activation energy**.

Molecular hydrogen does not accumulate in the ordinary conditions to high molecular unsaturated fatty acids and their glycerides, which form the basis of the liquid fat. This reaction does not take place even when the oil temperature rises and the pressure is greatly increased.

Hydrogen bonding to such fatty acids occurs in the presence of specific substances – catalysts, that have specific effects on the process. As a result of their effect, the acceleration of reaction(reaksiyaning tezlashuvi) is called **catalysis**. It is evident that hydrogen and even hydrogen, which is in the formating moment, as a result of some kind of reaction, should not have enough activity to overcome the energy barrier, which is called **energy resistance**. This resistance decreases slightly over the catalyst effect.

The chemical and physical properties of vegetable oils depend on the fatty acid content. Vegetable oils are rich in unsaturated fatty acids. (oleic, linolic, etc.), they have one or more double-bonds. During the hydrogenation, in addition to saturating of unsaturated fatty acids, there is occur migration and transizomerization of double-bonds, which increases the melting temperature and hardness of fats.

For example: oleic acid:

Location of double-bonds	T_{melt}. ^{0}C
9-10 cis	16
trans (elaidine)	44
11-12 cis	13
trans	39

Sunflower, cotton, soybean, rapeseed oils and fatty acids extracted from the soapstock are used in hydrogenation. The time of hydrogenation depends on the chemical composition of the raw material and the usage of salomas. By partial hydrogenation of vegetable oils, it is achieved to get oils with melting temperature T_{melt}-31-34^{0}C, hardness 160-320 g / cm and iodine number 62-82, they are used for production of margarine and culinary oils . In addition, it is taken oil with melting temperature T_{melt}-35-37^{0}C, hardness 550-750 g / cm and they are used in the production of confectionery products.

Chemical processes of hydrogenation of fats. The hydrogenation of fats consists of a set of chemical reactions with the participation of hydrogen and catalyst:

1. Hydrogen bonding to the ethylene bonds of unsaturated fatty acids.

$$\mathbf{-CH_2\text{-}CH = CH\text{-}CH_2 - + H_2 \longrightarrow – CH_2 - CH_2 - CH_2 - CH_2 - ;}$$

2. Formation of the position isomers of the unsaturated fatty acids (the migration of ethylene bonds in the chain of carbon molecules)

$$\mathbf{-CH_2\text{-}CH = CH\text{-}CH_2\text{-} \rightleftarrows –CH_2\text{-}CH_2\text{-}CH{=}CH\ ;}$$

3. Formation of geometric isomers of unsaturated fatty acids (cis-trans-isomers)

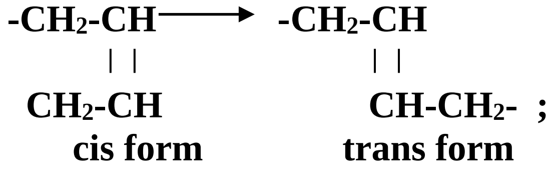

$$\begin{array}{ccc} \mathbf{-CH_2-CH} & \longrightarrow & \mathbf{-CH_2-CH} \\ \mid\ \mid & & \mid\ \mid \\ \mathbf{CH_2-CH} & & \mathbf{CH-CH_2-}\ ; \\ \textbf{cis form} & & \textbf{trans form} \end{array}$$

4. Replacement of fatty acids in triglycerides (re-etirification)

In the process of hydrogenation, the above mentioned three reactions take place.

The nature and intensity of the reaction depends on the glyceride composition and the properties of the hydrogenated fat.

Changes in fatty acids content in cotton oil hydrogenation are shown in Figure 19.

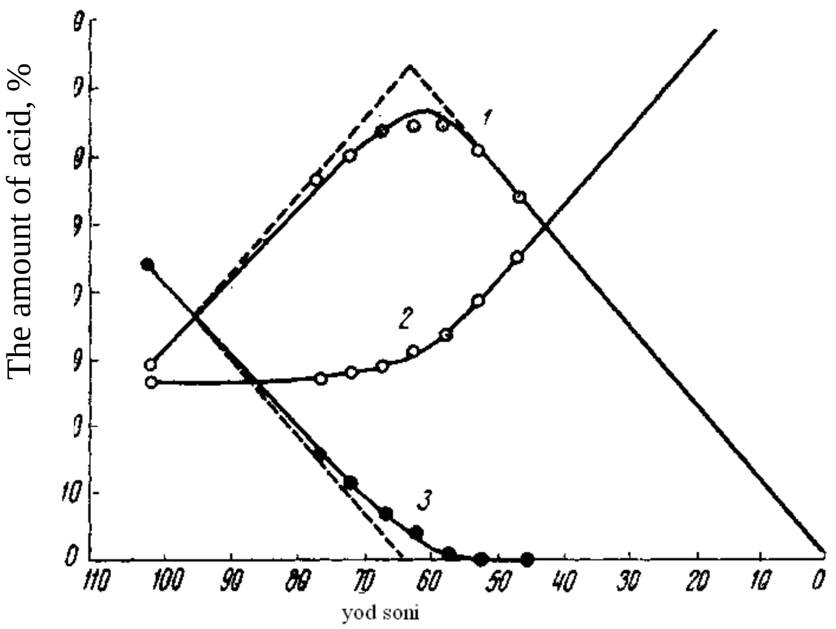

Figure 19. Change of fatty acids content in cotton oil hydrogenation: 1-olein, 2-saturated acids, 3-linol

The speed of the hydrogenation process. The hydrogenation rate of glycerides depends on the content of fatty acids in them, the catalyst activity and quantity, the intensity of hydrogen transfer from the system and its uniform distribution in oil, the temperature of the oil.

As much the catalyst is active, as the hydrogenation process is so fast. Increasing the amount of catalyst can speed up the reaction. However, if the catalyst exceeds 0.3-0.4% by weight of oil, the rate of reaction does not increase significantly. As the temperature increases, the hydrogenation rate increases. Industrial hydrogenation is carried out at a temperature of 180-220 °C. The temperature of the hydrogenation depends on the catalyst activity and the nature of the fat.

Selectivity of the process of hydrogenation of fats. As a result of studying the composition of fatty acids and glyceride in the process of hydrogenation of fats, the following general laws were revealed.

Several double-bond fatty acids are gradually hydrogenated and eventually convert to acids that have fewer double-bonds.

$$\mathrm{Le} \xrightarrow{+H_2} \mathrm{L} \xrightarrow{+H_2} \mathrm{Ol} \xrightarrow{+H_2} \mathrm{S}$$

Linolenic acid with three double-bond	Linoleic acid with two double-bond	Oleic acid with one double-bond	Stearin acid without double-bond

In hydrogenation of oils which consist linoleic and oleic fatty acids, first linoleic acid saturates. In several acids with single double-bond, first saturate fatty acid with less carbon atoms, that is, oleic acid hydrogenate faster than eruc acid ($C_{22:\,1}$).

Selectivity is the choice saturation of double-bonds. When selectivity is associated with rate of saturation of fatty acids and their molecular mass, it is called **radical selectivity**. The linoleic acid in the trilinolein is primarily saturated. Such selective saturation is called **glycerid selectivity**. If the level of unsaturation of fatty acids is greater, the hydrogenation rate will be high. For example, the rate of linoleic acid up to oleic acid is from 2 to 10 times higher than that of oleic acid in stearic acid. The hydrogenation rates differ in the hydrogenation of the mixture of fatty acids with different levels of unsaturation.

For example, in the hydrogenation of soybean with the participation nickel catalyst at high temperature, the ratio of saturation velocity constant of linolenic, linoleic, oleic acid, is as follows:

$$k_{LE} : k_L : k_{OL} = 30 : 20 : 1$$

The rate of hydrogenation of unsaturated fatty acid atoms does not depend on the triglyceride composition.

Radical selectivity in the hydrogenation of fats depends on the properties and activity of the catalyst. Sometimes high active catalysts exhibit less selectivity than less active catalysts. However, this phenomenon is characterized catalysts, which are different from one another by their activity, only produced on the basis of certain metals. For example, in the nickel catalyst used for a long time compared to the newly prepared catalyst, the hydrogenation process goes with high selectivity. The palladium catalyst has a relatively low selectivity compared to nickel catalyst which has lower activity than palladium.

When the temperature is increased when hydrogenating cotton, sunflower and similar oils, radical selectivity also increases. Raising pressures will cause reduction in selectivity. The amount of catalyst used also affects the selectivity of the hydrogenation process.

In the process hydrogenation with participation of nickel and other catalysts, selectivity decreases with decreasing of temperature. The relationship between process selectivity and temperature depends on the linoleic and linolenic hydrogenation mechanism.

Linoleic and linolenic acids are first converted into adjacent double-bond isomers on the surface of the catalyst, after which the adjacent double-bond dienes are hydrogenated at high speeds to monoenes. The formation of the adjacent isomers of the aforementioned acids increases the selectivity with respect to the temperature rising.

The viscosity of vegetable oils increases with temperature drops, and obtaining a selective hydrogenated product from the liquid phase slows down. As a result, the concentration of linolenic acid glycerides on the surface of the catalyst, decreases. The concentration of glycerides of mono-unsaturated acids increase in the liquid phase and increase the hydrogenation of mono-unsaturated acid and reduce the selectivity of the process.

Increased hydrogen pressure will help reduce process selectivity. As the pressure increases, hydrogen concentration increases on the surface of the catalyst and, as a result, the possibility of hydrogenation of fatty acids, with different levels of unsaturation, increases.

In practice, hydrogenation of fats is carried out up to the iodine number is 50-80. Therefore, selectivity affects to peculiarity of the salomas.

Indicators	cottonseed oil	selectiv hydrogenated oil	non selectiv hydrogenated oil
Y.s. % J_2	109,8	71,0	73,2
T_{melt}, ^0C	-	30,6	35,5
Acid content, %			
L	50,3	8,4	18,5
Ol	20,1	60,5	43,8
saturated	29,6	31,1	37,7

The **selectivity level** - determined by the ratio of velocity constants of the hydrogenation reaction of unsaturated fatty acids.

Hydrogen rate of linolenic acid (dL / $d\tau$) is characterized by the following formula in which the pressure of hydrogen is unchanged:

$$\mathbf{dL/\,d\tau=-k_L\cdot L}$$

where: k_L- hydrogenation rate constants of linoleic acid.
L-linoleic acid concentration
The hydrogenation rate of the oleic acid is as follows

$$\mathbf{dS/\,d\tau=k_{OL}\cdot Ol}$$

where: dS / $d\tau$ dose concentration of stearic acid.

K_{OL}- hydrogenation rate constants of oleic acid.

Hydrogenation selectivity is determined by the following formula:

$$\mathbf{S_l = K_l/K_{ol}}$$

The selective process depends on the nature of the catalyst. Copper-nickel catalyst is more selective than nickel catalyst, and palladium catalyst is few selective than nickel catalyst. The used catalyst is more selective than the new catalyst.

Selection depends on various factors (temperature, hydrogen pressure). As the temperature increases, selectivity increases, and with the increase in the pressure of hydrogen, selectivity decreases.

Isomerization of fatty acids. Isomerization of fatty acids occurs during the hydrogenation of fats.

When hydrogenation of the oleic acid or its ethers is stopped when their iodine number is reduced to a certain amount, in the resulting product produces stearic acid, along with oleic acid with high melting temperatures (at 40-44 °C). These acids are commonly called isoacids. Isooleic acids raise the melting temperature of hydrogenated fats. Interestingly, the rate of production of isoolein acids in the hydrogenation of oleic acid esters is much higher than that of stearic acid.

The isoolein acids formed from the oleic acid are in the form of a mixture of transesteromers in the form of elaidic acid and oleic acid drift. In the case of hydrogenation, in isoolein acids, the double-bond trans-isomers of the molecules of oleic acid to the methyl group will increase. Isoolein acids also form in large quantities when hydrogenation of linolic acid. In this case, formed isoolein acids are trans-isomers of oleic acid. The formation of isoolein acids is the result of hydrogen influence on the source of the primary acid. If the fats are heated with nitrogen in the presence of a non-hydrogen catalyst, the isooleic acids do not form.

The amount of isooleic acids in the product of salomas sometimes increases more than 40%. This amount depends on the primary oil content, its hydrogen saturation level, and the conditions under which the hydrogenation process takes place. Salomas derived from much linoleic acid containing fat can contain high amounts of isooleic acids. Hydrogenation at high temperatures also results in more isooleic acids. Isooleic acids are less in the salomas derived from the used catalyst than in the new catalysts. In palladium catalysts more isooleic acids are formed than nickel catalysts.

Provision level of the surface of the catalyst with hydrogen especially effects to the amount of isooleic acids in salomas.

As provision provides better, as isooleic acids occur less. The formation of isoacids are explained with formation of half-hydrogenation products. In the selective hydrogenation of linolic acid, primarily the adjacent double-bond dienes are formed and then converted to the positional isomers of the oleic acid.

The bonding of two hydrogen atoms into the ethylene bond increases step by step. First formed the catalyst with half-hydrogenated product.

The half-hydrogenated product is highly unstable, with addition of another hydrogen atom, which can be converted to a saturated compound or with expulsion of one hydrogen atom can be converted to the unsaturated isomer. This is seen in the following reaction.

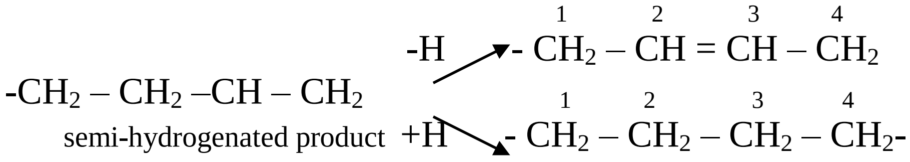

$$-CH_2-CH_2-CH-CH_2 \begin{cases} \xrightarrow{-H} -\overset{1}{CH_2}-\overset{2}{CH}=\overset{3}{CH}-\overset{4}{CH_2} \\ \xrightarrow{+H} -\overset{1}{CH_2}-\overset{2}{CH_2}-\overset{3}{CH_2}-\overset{4}{CH_2}- \end{cases}$$

Isoacids increase the salomas hardness with their melting temperature.

For example.

	T_{melt} ^0C
Oleic acid 9-10 sis	16
trans (elaidin)	44
11-12 sis	13
trans	39

The isomerization rate depends on the temperature and hydrogen pressure of the catalyst. Nickel and copper-nickel catalysts have low isomerization ability, while palladium catalyst has high isomerization ability. The active catalyst increases the rate of hydrogenation compared to the rate of isomerisation. Therefore, in the active catalysts soft-consistent salomas are obtained. The used catalysts are used to obtain salomas with high levels of hardness.

Test questions

1. The essence of the hydrogenation of oils.
2. Chemical changes in hydrogenation of oils.
3. Selectivity in the process of hydrogenation.
4. Isomization of fatty acids.
5. Sis, trans oleic acids.
6. The need for oils hydrogenation.
7. Hydrogenation process - what is it?
8. Product of hydrogenation
9. Hydrogen speed
10. What is the rate of isomerization?

10 – LECTURE
HYDROGENATION CATALYSTS FOR OILS AND FATS

Plan: Suspended and stationary catalysts, their general characteristics and conditions of use. Nickel-copper catalysts, their composition. Methods of obtaining. Features of the nickel-copper catalyst. New generation nickel catalysts. Technologies for the preparation and regeneration of catalysts.

The reactor that receives carbonate salts. Basic equipment structure. Equipment for the extraction, washing and drying of powder catalysts. Micro grinder. Retort. Catalyst passport mixer.

Key words and phrases

Catalyst; Catalysis; Geterogenic catalysis; Active centers; Stable catalysts; Activity; Physical adsorption; Hemosorption

Hydrogenation catalysis mechanism. Hydrogen and unsaturated substance - ethylene are adsorbed onto the surface of the catalyst and become activated. If the activated hydrogen and unsaturated substance molecules are very close together, they react with each other for hydrogenation. As a result, the saturated substance – ethane occur, it is physically adsorbed and easy to derive from the surface of the catalyst.

The catalysis mechanism, from the point of activation of the reactive substances molecules of the chemosorption, the hydrogenation of ethylene can be represented by the following scheme

$$K + H_2 \longrightarrow (K)\ (H_2)_{ad.akt}\,;$$
$$K + C_2H_4 \longrightarrow (K)\ (C_2H_4)_{ad.akt}\,;$$
$$(K)\ (H_2)_{ad.akt} + (K)\ (C_2H_4)_{ad{\cdot}akt} \longrightarrow (K)\ (H_2)_{ad.akt}\ \ (C_2H_4)_{ad.akt} \longrightarrow$$
$$K\ (C_2H_6)_{ad.fiz.} \longrightarrow K + C_2H_6$$

Here: $(H_2)_{ad.act}$ and $(C_2H_4)_{ad.act.}$ - activated adsorbed hydrogen and ethylene, K-catalyst.

It is difficult to saturate the double-bonds of unsaturated compounds with hydrogen, it will be in two stages. Initially, a single carbon atom saturate with hydrogen, and the other saturate. Thus, the hydrogenation process goes through the half-hydrogenation intermediate phase. This is illustrated in the following.

$$-CH = CH - + \text{hydrogen} \longrightarrow CH_2 - CH- + \text{ hydrogen} \longrightarrow - \ CH_2 - CH_2 -$$

$$\begin{tikzcd} & -CH{=}CH- + \text{hydrogen} \\ -CH_2 - CH- \arrow[ur, "\text{fast}"] \arrow[dr, "\text{slow}"'] & \\ & -CH_2 - CH_2 - + \text{hydrogen} \end{tikzcd}$$

In the half hydrogenated intermediate phase occurs half-hydrogenated product that is highly unstable, the rate of separation of an atomic hydrogen with the formation of unsaturated substance, causes the formation of various intermediate products that affect the properties of the non-complete hydrogenated oil during the hydrogenation process.

The essence of catalyst movement. In order for the chemical reaction to take place, molecules must collide, but only a small fraction of the clash will cause accumulation of molecules. This is explained by the fact that very few molecules have the ability to break down bonds and build new bonds. This minimal energy of the molecule is called the **energy activity of the reaction**.

The catalyst combines with the reactants to form a highly reactive surface, breaking the intercellular bonding and changing its structure.

Catalysts accelerate the reaction rate 10^6-10^{16} times. The energy activity of the hydrogenation process decreases from 700 kJ / mol to 40-60 kJ / mol.

Hydrogenation consists of the following steps:

1) bring the reactive substances on the surface of the catalyst;
2) adsorption of this molecule on the surface of the catalyst;
3) chemical exchange of sorbent molecules and product formation;
4) expenditure of the bonds of the molecules of the product on the catalyst surface;
5) separation them from the surface of the catalyst.

There are two types of adsorption on the surface of the catalyst.

1) Physical 2) Hemosorption (activated adsorption)

In physical adsorbsion adsorbed molecules do not interact with surface atoms. The molecule properties do not change, but the molecules are solidly attached to the surface.

In physical sorption, the desorption of molecules is easy and fast. With the rise in temperature, physical adsorption decreases and disappears rapidly, suggesting that physical interaction between adsorbed molecules and the surface of the solid body is very weak.

Unlike physical adsorption, the hemosorpsion is not present on the whole surface of the catalyst, but in some parts (active centers).

The molecules are activated in hemosorpsion. When the temperature rises, the hemosorpsion is accelerated. As a result of the hemosorpsion, there is formed chemical effect between adsorbent surface and sorbetized substance, resulting in the formation of hemosorbsion combination. Hemosorbsion has a choice ability, ie, there is should be chemical compatibility between the substance and the catalyst. For example, platinum, palladium, nickel have the ability hemosorbsion of hydrogen and unsaturated compounds. Free atoms with high chemical activity of hydrogen combine with nickel to form hydrides:

$$H : H \rightarrow H + H; \quad H + Ni \rightarrow NiH$$

Concept of active centers: There are adsorption centers with various activity on the surface of the catalyst. Such adsorption centers are called **active centers of the catalyst**. The atoms in the edges or ends of the crystals are energy-less saturated than atoms which are in sides and sizes of the crystals and they form the active centers.

According to the multiplex theory of catalysis, developed by academician A.A.Balandin, the active centers of catalysts located in the sides of crystalline and consist of collection of several atoms which are located in certain position and crystalline sphincters, which are known as adsorption centers.They are consist of several atoms, so A.A.Balandin calls them multiplet. Depending on the number of adsorption centers in active centers:

- doubles of two adsorption centers;
- three triplets,
- six sextets and so on.

The active surface area is about 1-2% of the total catalyst surface.

Industrial catalysts for hydrogenation of fats must meet the following requirements:

1) it is only should be capable of accelerating the hydrogenation process and does not have negative reactions;

2) they should have high efficiency, productivity and selectivity;

3 catalyst should separate easily from the salomas;

4) Catalyst costs should be cheap, raw materials and materials should be abundant.

To determine the activity of the powdered nickel catalyst, 50 g of well refined sunflower oil is hydrogenated with hydrogen at a rate of 0.18 m^3 / h for 1 hour at 200^0C temperature. Catalyst activity is characterized by the degree of saturation of the obtained oil:

$$A = \frac{(n_M - n_C)100}{n_M - 1{,}4470}$$

Here: A - catalyst activity,%;

n_M - light diffraction indication at 60^0C;

1,4470 - light diffraction indication of sunflower oil on hydrogenating till y.s.=0 (60^0C).

Decrease of the light diffraction indication to 1×10^{-4}, corresponds to the decrease of iodine number in one unit.

According to activity nickel based catalysts are grouped into the following groups:

Highly active - A = 80-100% (nickel content of oil 0.05%)
Active - A = 70 ÷ 100% (nickel in oil 0.1%)
Average active - A = 45-69% (nickel in oil 0.1%)
Low-active - A = 25-44% (nickel in oil 0.1%)

Sometimes the activity of the catalyst is expressed by the melting temperature of salomas dissolved in the above hydrogenation conditions.

Suitable for activity the change of the melting temperature of the salomas and the degree of unsaturation of fat are as follows.

A %	30	37	45	51	58	66	73	80	88	96	100
t, ^{0}C	20	25	30	35	40	45	50	55	60	65	69

The melting temperature of salomas depends not only on the hydrogenation depth, but also on the selectivity of the process and the accumulation of isomers of mono-unsaturated acids. Therefore, the evaluation of the catalyst activity with the melting temperature gives one-sided results.

To evaluate the selectivity of the catalyst, 1 kg of well refined sunflower oil hydrogenated in the turbine mixer reactor, with hydrogen at 200^0C temperature, with bubbling velocity of 0.01 m^3 / h and oil with nickel concentration of 0.05% or 0.1% up to light diffraction indication is 1,4540 – 1,4530. During the process samples are taken from the hydrogenated mass, the reaction order of olein and linoleic acid glycerides is determined, the hydrogenation speed constants and the hydrogenation selectivity ratio of these acids in the raw material are calculated according to this formula.

$$\mathbf{S_l = K_l/K_{ol}}$$

In most cases, the hydrogenation reaction of the linoleic acid acyls varies from zero to the first one, depending on the process. In this case selectivity is considered as convenient by the following equation.

$$\mathbf{S_l = (O_l – O_{lo}) / (L_o – L),}$$

Here S_l - coefficient of the selectivity to linol acid glycerides
L_O, L - start and end amount of linol acid;
O_{lo}, O_l - start and end amount of oleic acid.

According to selectivity nickel based catalysts are divided into the following groups

	S_l	S_l
High selective	25-50	0,96-0,99
Selective	15-24	0,90-0,95
average selective	10-14	0,78-0,88

The catalyst's isomerization ability is evaluated in one of three ways.

1. Ratio of hydrogenation and transizomerization rate constants of linoleic acid: $A_t = K_t/K_l$

2. The rate of increase in the amount of transizomers with decrease the amount of linolic acid in fat: $A_t = \Delta T/\Delta L$

3. The rate of increase in the amount of transizomers with the decrease in iodine number of fat: $A_t = \Delta T/\Delta y.s.$

Here: A_t - catalyst isomerization activity, K_t - transistorization speed constants; ΔT - increase in the amount of transizomers,%; ΔL - decrease of linoleic acid content in fat glycerides,%; Δy.s. – decrease of iodine number in fat,%

For catalysts with high isomeric capacity, the K_t / K_l and ΔT/ΔL ratio are in the range of 0.9-1.2 g.

Nickel-based catalysts are used in the hydrogenation of fats, as well as nickel and copper catalysts are also used. In addition, chromium, titanium, palladium, platinum and other metals are used.

Structure of the catalyst is powdery, granulated, in alloy form. The powdered catalyst is used as suspension (oil), which is called dispersed or suspended. If alloy sizes are 10-15 mm in size, they are called stable catalysts.

To increase the surface of the catalysts, the metals are drowned into the surface of porous material. The catalyst obtained by this method is called catalyst with deliverer.

Catalysts are divided into two groups depending on the method of their removal.

1) drowned
2) alloyed.

Industrial catalysts. The catalyst nickel kizelgur. The production of this catalyst has the following steps:

5-8% of $NiSO_4$ solution is prepared, in this solution 8-12% kizelgur is suspended; With a solution of 10-20% of sodium (Na_2CO_3) solution at 80-90 ° C, nickel carbonates are dipped in kizelgur.

$$NiSO_4 + Na_2CO_3 \rightarrow \downarrow NiCO_3 + Na_2SO_4$$

Washing, drying and crushing of sediments; Degradation of nickel carbonate to nickel oxide at temperatures of 250-300 ^{0}C.

$$NiCO_3 \text{ ----- } NiO + SO_2$$

Returning of Ni oxidation: $NiO \rightarrow Ni + H_2O$

Nickel copper catalysts. These catalysts are based on drowning of nickel and copper carbonates together with sodium by the following reaction.

$$NiSO_4 + Na_2CO_3 \longrightarrow NiCO_3 + Na_2SO_4$$
$$CuSO_4 + Na_2CO_3 \longrightarrow CuCO_3 + Na_2SO_4$$

Hydrogenating nickel-copper catalysts are obtained in two ways: drowning of nickel copper carbonates together or treatment to mechanical mixture of nickel and copper carbonates with aqueous solution of ammonia.

To obtain joint deposition of nickel and copper carbonate, their sulphates are prepared from an aqueous solution of copper 3: 1 or 1: 1 with a concentration of 35 g / l.

10% soda solution is added to the solution at 40-45^{o}C with 20% -30% excessive amount of it. If necessary, gradually add to the initial solution - kizelgur, perlite, activated charcoal. At the end of the deposition the sediment is filtered and the excess soda and sulfate in the filter is washed away. Then the precipitate is dried and crushed at a temperature not higher than 120^{0}C.

The content of drowned carbonates depends on the conditions of drowning and drying.

The main part of drowned, unchanged catalyst is a mixture of metal carbonates. For example, the structural formula of carbonate with a ratio of 2: 1 to nickel and copper can be expressed as:

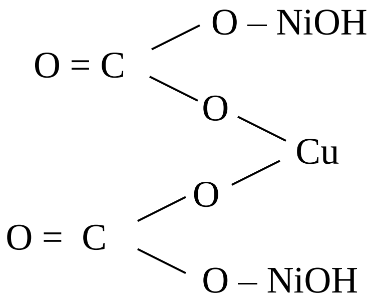

If the drowning continues in deliverer, unchanged catalyst will have more nickel and copper silicates except deliverer. Moreover, there is always a small amount of copper and nickel sulphates in it. If the amount of residual sulfate exceeds 1%, the catalyst's activity decreases dramatically.

The chemical composition of nickel and copper carbonates used in our country are as follows: $Ni_2 (OH)_2CO_3 \cdot 2H_2O$ and $Cu_2 (OH)_2CO_3$. When using these carbonates, nickel-copper carbonate catalyst is introduced and processed. This ratio includes the treatment with 10-25% of ammonia water to occur paste with 30-80% of moisture content at 30-60 ° C. To pick up the catalyst with deliverer, add the kizilgur, perlite and activated charcoal. After processing, the temperature rises to $120\text{-}150^0C$ and it is dried , then cooled, obtained nickel-copper carbonates are similar to the drowned carbonates in their chemical composition. Currently, this method is used to obtain untreated catalysts of nickel: copper ratio of 1: 1 and 1: 2.

The method is based on the formation of nickel copper aminocarbonate complexes. When the temperature is gradually increased, these complexes are separated into ammonia, SO_2 and water and converted to nickel-copper carbonates. The amount of residual ammonia content in the catalyst does not exceed 1%.

Nickel-copper carbonate catalysts are characterized by the fact that nickel reversed easily to metal. Nickel oxide is returned only when the temperature is 400-500 ° C. Copper reduces the reduction temperature of nickel, ie copper oxide is easily returned, so there is occur copper in form metal, so that the nickel-copper carbonates pass into the Cu-NiO system. Xemosorbed hydrogen in copper migrated to the boundary of separation of copper-nickel oxide and return at the end. In the nickel returning, the separating surface increases according to the size and the return of nickel oxide increases suddenly. Therefore, the return of nickel in copper catalysts ends at a temperature of 260^0C.

Copper has weak hydrogenation properties, but copper and nickel oxides in metal form, play a key role when products are returned to nickel copper carbonates. This, in turn, allows the return of nickel copper catalyst in the form of a suspension in the oil, followed by the use of the recovered catalyst in the hydrogenation or hydrogenation with the participation of a direct non-recovered catalyst.

Untreated nickel-copper catalysts start hydrogenation at 160-180^{0}C. Its activity is 80-100% (0.1% nickel), selectivity is 90-93% and isomerization ability is 0.6-0.8%.

Untreated nickel-copper catalysts have the following defects: filtration is in a low rate, loss of efficiency when reused, easy react with fatty acids and form nickel and copper soaps in the salomas.

Alloyed (permanent) catalysts. These catalysts are obtained from nickel-copper-aluminum or nickel-titanium-aluminum and other alloys in colonial reactors. These alloys consist of 45-50% Al, 12-23% Cu, 25-45% Ni and various (additives) promoters. The granule is manufactured at the size of 5-15 mm. Then the alloy is activated, for that purpose it is washed with a 3-10% sodium hydroxide solution, which contain 3-10% of aluminum concentration.

$$2Al + 2NaOH + 2H_2O \longrightarrow 2NaAlO_2 + 3H_2$$

The level of alkaline wash is determined by the amount of released hydrogen. For example: In the separation of 5% from 1 t alloy, 30% of hydrogen derive.

After treatment with alkaline, as a result of melting of aluminum the alloy surfaces remain active. The alloy washed with alkaline, washed with condensate until neutral reaction, dried.

Test questions

1. Catalysts for hydrogenation of oils.
2. The essence of catalyst movement.
3. Hydrogenation stages.
4. Concept about active centers.
5. Industrial catalysts.
6. The theory of geteroogen catalysis.
7. Catalyst requirements
8. Classification of catalysts
9. Adsorption processes on the catalyst surface
10. Preparation of catalysts.

11 – LECTURE
HYDROGEN PRODUCTION TECHNOLOGIES

Plan: Properties of hydrogen. The main industrial methods for producing hydrogen. Hydrogen production by electrolysis of water. Electrolyzers, their structure, performance. Equipment for hydrogen production by electrolysis. Baths and filter electrolysers. Electrolyzer cell. FV-500 electrolyzer. The concept of gas tanks.

Key words and phrases

Hydrogen; Iron steam; Conversion; Electrolysis; Electrolyzer; Cathode; Anode; Gazholder

Hydrogen is the most common chemical element. It is found in nature only in a connected form. For example, 11% of water is bonded to hydrogen, as well as 25% in the natural gase and in the oil hydrocarbons.

The aforementioned products are the main raw material for hydrogen production.

Hydrogen is a non-toxic, colorless, lightest gas. Hydrogen density is 0.09 kg / m^3 at the atmospheric pressure and at the 0 °C temperature. The hydrogen explosion limit (in terms of volume) is as follows: the lower limit is 4% and the upper limit is 75%.

Hydrogen is a difficult soluble gas, ie its melting temperature rises as rising pressure in oil, fat and fatty acids.Theoretical spending of hydrogen in the process of hydrogenation V_t (m^3 / t in the fat) is expressed by the following formula.

$$V_t = 0,8825\ (Y.S_b – Y.S_0)$$

$Y.S_b$ and $Y.S_0$ – The beginning and end iodine number of hydrogenated fat.

The spending of hydrogen is considerably higher, in the production of salomas, in enterprises than that theoretical spending of hydrogen, because of the certain amount of hydrogen is exposed to the atmosphere during the periodic cleaning of hydrogenation equipment, as well as hydrogen is lost as communication equipments are not tightly fixed and with salomas.

The actual amount of hydrogen expenditure is V_f (m^3 / t fat)

In the production of nutritional salomas

$$V_f = (0,95 \div 1,1)\ (Y.S_b – Y.S_o),$$

In the production of technical salomas

$$V_f = (1,05 – 1,2(Y.S_b – Y.S_o)$$

Industrial methods of hydrogen production.

Technical hydrogen is produced in 3 different ways:

1) iron - steam method (contact)
2) conversion method
3) electrolytic method

Iron steam method (contact)

Iron - steam method (contact)

Obtaining of hydrogen by iron-steam method is based on the oxidation reactions of the Fe metal with water vapor.

$$3Fe+3N_2O \rightleftarrows 3FeO + 3N_2; \quad 3FeO + H_2O \rightleftarrows Fe_3O + H_2$$

In general, it is can be written using the following equation

$$3Fe + 4H_2O \rightleftarrows FeO_4 + 4H_2$$

The resulting iron oxide is converted to the iron metal state by using water gas.

$$Fe_3O_4 + CO \rightleftarrows 3FeO + CO_2; \qquad 3FeO + 3CO \rightleftarrows 3Fe + 3CO_2$$

Or in general, it is can be expressed in the following equation

$$Fe_3O_4 + 4CO = 3Fe + 4CO_2$$

The converting reaction of the iron oxide with the help of water gases is expressed by the following equation

$$Fe_3O_4 + 2(H_2 + CO) \rightleftarrows 3Fe + 2H_2O + 2CO_2$$

The resulting iron metal is oxidized with water vapor again. Production of hydrogen is carried out in two phases.

1. The hydrogen is generated with iron - water vapor.
2. The formed iron oxide is converted to the iron metal state by using a water vapor.

Poduction of hydrogen by iron-steam method is sequential oxidation-reconstruction processes.

Obtaining of hydrogen by using the conversion method of natural gases.

Methane is a major constituent of accompanying gases of oils. Methane gas is oxidized by water vapor with participation of catalysts of nickel, magnesium oxide, or cobalt at 1000-1100 °C in the convertors.

$$CH_4+H_2O = CO+3H_2; \qquad CH_4+2H_2O = CO_2+4H_2;$$

The resulting gas is exhaled from the CO gas during washing with ethanolamine solution under pressure. At 500 ^{0}C, CO gas is converted into carbon dioxide by using iron-chrome catalyst and steam.

$$CO+H_2O = CO_2+H_2$$

Production of hydrogen by electrolysis of water.

Two electrodes (cathode and anode) which are placed in the electrolyte-aqueous solution, form the electrolyte apparatus (electrolyte cells). When the electrodes have a constant voltage, electrochemical reactions, ie oxidation-reconstuction processes are occur. In the industrial enterprises alkaline electrolyte solutions are used in the electrolytic disintegration of water into hydrogen and oxygen. (sometimes KOH, NaOH - sodium hydroxide).

The reaction from the alkali electrolytic solution is carried out electronegatively.

When there is spent electric current from alkaline electrolytic solutions, the following reactions occur.

In the cathode, while reconstruction process of the water, molecular (H_2) and hydroxide ions are formed.

$$2H_2O + 4e = 2H_2 + 4OH^-$$

with hydroxide ionic oxidation, water and molecular oxygen (O_2) occur.

$$4OH^- – 4e = 2H_2O+ O_2$$

The equation of electrochemical process is as follows.

$$2H_2O = 2H_2 + O_2$$

The diagram of electrolytic cell is as follows

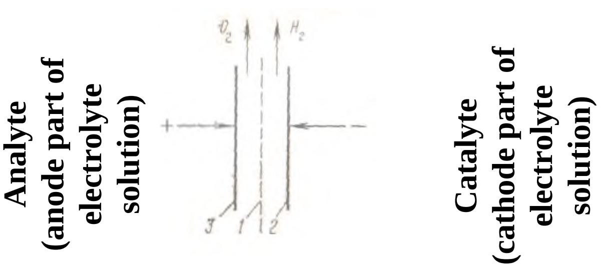

Suvni eletroliz qilganda ajralib chiqqan gazlarning miqdori (m^{z}da) quyidagi formula bilan aniqlanadi

To remove the gases which are formed in the cathode 2 and in the anode 3 of electrolytic cell, the sections of anode, cathode are blocked by porous barrier (diagram) 1. Water, electrolyte ions should be able to pass from the barrier but the gaseous substance should not be able to pass from it. When 1 Ampere*hour electric current is passed by the electrolytic cells, there is form 419 • 10^{-6}nm^3 hydrogen,H_2, 209.5 10^{-6} nm^3 oxygen O_2. Useful work coefficient (UWC-foydali ish coeffisenti) of current electrolyzers is equal to 0.95-0.98. The rest of the electrical current consumes in the additional electrochemical processes.

The amount of gases, which are emitted while water electrolysing, is determined by the following formula (m^3):

$$H_2 = 419 \cdot 10^{-6} b\ I\ N\tau$$

$$O_2 = 209{,}5 \cdot 10^{-6}\ b\ I\ N\tau$$

$$H_2 = 419 \cdot 10^{-6} b\ I\ N\tau$$

$$O_2 = 209{,}5 \cdot 10^{-6}\ b\ I\ N\tau$$

Here, b–the gas output to the electrical current (determined by the experiment for each electrolyzer); I - power of electrycal current, A; N - the number of electrolytic cells in the electrolyzer; τ – time of the electrolyzers operation.

There are used FV-250 and FV-500 electrolyzers in the hydrogen plants. Their capacity is 250, 500 nm^3 H_2.

Electrolyzer in the industry and their structure. (Figure 20). Electrolyzes are similar to the filtrpresses by their structure(construction). (FV - filtrpress vodorod, filtrpress hydrogen). Only, they are made up of electrolytic cell, diaphragm and electrodes

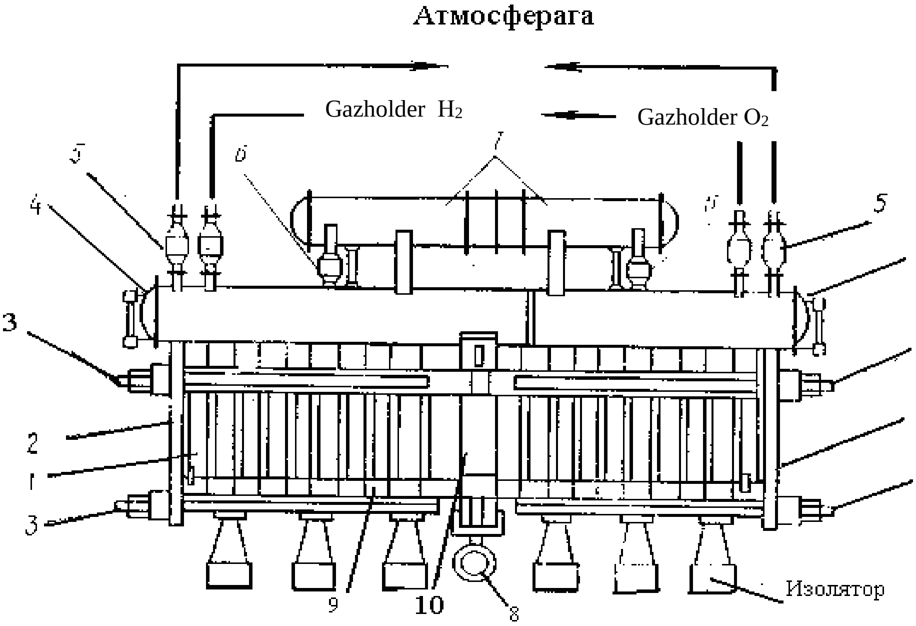

Figure 20. Electrolyzer

The electrolyzer is collected using several electrolyte cells and 2 end plates by using 3 fastening devices. Each cell of electrodes is attached to the diaphragm frame with paronite gaskets.

There are gas outlet channels from cathode and anode solution, in the upper part of the diaphragm. The hydrogen and the oxygen, which come from the droplet separator 6 and from the capacitor 7, are collected in the gas collector 4. The gas collector and capacitor are divided into two parts (for H_2 and O_2), which creates conditions for separately collecting of gases.

There is mid-camera 10 in the center of the electrolyzer, where the electrolyte solution is mixed and cooled. This camera divides the electrolyzer to two electrolytic cells, each of them can work separately. The side walls of the electrolyzer, which are attached tightly, serve as an electrode.

The middle camera is divided into two parts. Part of it is used for cooling anolite solution in the anode cells cavity of the electrolizer, and the second part is used for cooling the cathode solution in the cathode cavity of the electrolizer. Anolite comes to the middle camera as a result of natural circulation and it is cooled by a coil cooler. As a result, the dissolved O_2 gas in the anolite is collected in the gas collector 4 and dispatched to the gasholder via pipes 5. Catholyte is cooled by a coil cooler and separated hydrogen is collected in the hydrogen section of the gas collector. Then it is directed through tubes 5 to the hydrogen gasholder.

Anolite and catholite, which is cooled and purifyed from gas, are mixed in the middle camera. Then, it is cleaned from the mechanical compounds by passing through the filter and it transmits to the box. Here it is diluted with water and transmits to electrolytic cells through supply channels 9.

The electrolyzer FV is bipolar, depending on the method of connecting the electrodes to a permanent source of voltage.

Bipolar electrode connection diagram

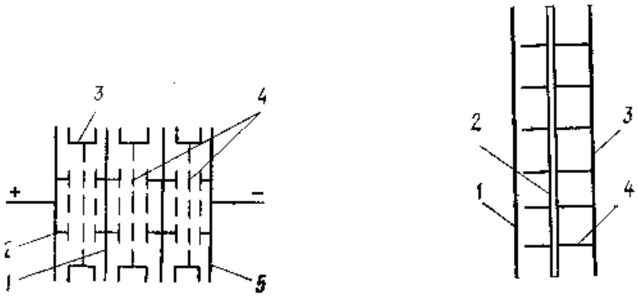

As shown in the picture above, the voltage is given to the electrodes 2 and 5, they are monopolar and serve as cathodes and anodes. Cells with interconnected electrodes are bipolar. The direction of the electrode facing the anode is negatively charged and it is a cathode. The electrode facing the cathode is positively charged and it is anode.

Thus, each electrode divides adjacent cells into parts and serves as cathode to the one and as a anode to the other. The cathode and anode cavity, which is inside of the cell, is divided diaphragm barrier 4, which is fastened to the frame of the diaphragm 3. For good circulation of electrolyte solution and for the rapid separation of gases, surfaces of the anode and cathode are perforated to the hole with diameter 6 mm.

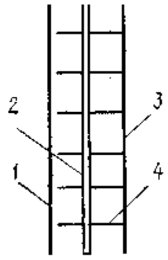

Bipolar electrode construction

The middle steel sheet 2 (main) divides the adjacent electrolytic cells into parts. The electrodes 1 and 3 are fixed by 4 anchors. The bottom of the steel sheet 2 has a hole with 15 mm in diameter, which allows the electrolyte solution to flow from one cell to another. Tha anod side of the main steel sheet is covered with nickel. The cathode is made from ordinary carbon steel.

Hydrogen storage. (Figure 21). Hydrogen is stored in the wet gasholders with a volume of up to 3000 m^3 under pressure of 2.7-3.6 kPa, in the hydrogen plants. The rising height of the hood of the gazgholder depends on the amount of hydrogen in the gasholder. The upper limit is set so that the bottom part of the hood should be immersed in the water body 0.2-0.3 m.

The bell, which is set with open side, on the water surface of the water-filled steel concrete pad is the main part of the water gasholder. The gas is supplied through pipes 4, under pressure from workshop and the bell slowly rises from the water. The rising of the bell from the water, depends on the amount of gas, which is collected in the gasholder. At the highest level of the water, the bottom of the bell should be immersed in the water 0.2 - 0.3 m. Thus, the emission of H_2 through the gasholder is avoided. The cleaning of gazoholder from H_2 gas is executed by the valve on the bell.

Hydrogen comes out through pipes 9 and 7 from gasholder. The pipes 4, 3 and 9 are connected through the hydraulic shutter 6. Hydraulic shutters are empty when working. Distilled water should be used for long periods of operation of the electrolyzer (10 - 20 years), it should not contain iron, chlorine and carbonate salts.

The accumulation of the above salts leads to corrosion of electrode elements. In the preparation of an alkaline solution, it is necessary to use pure chemical potassium alkali. In order to increase the durability of the electrolyzers, 2 - 3 kg of bichromate is added to the solution of 1 m^3 of electrolyte.

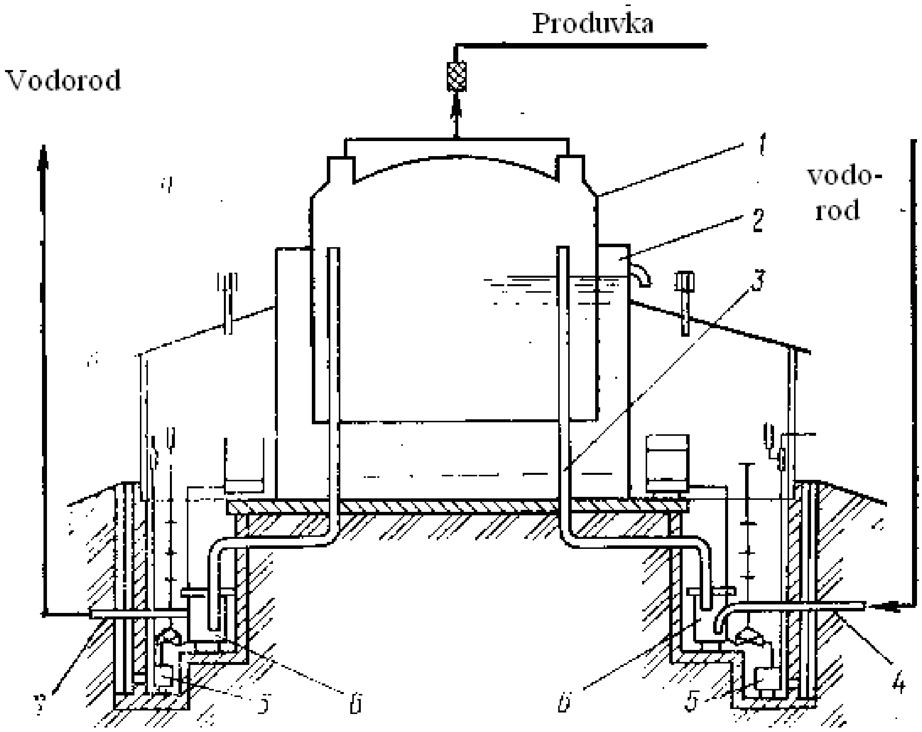

Figure 21. Gazholder

Technological scheme of hydrogen production. (Figure 22). The distilled water is delivered from the distillator (2) to the condensate collector (3) and pumped with pump (4) to the tank (5). A portion of water from tank (5) is dispatched to another tank (6), where, a solution of KOH with concentration of 29% or 320-380 g / l, is prepared and dispensed to the electrolyzer (1). The tank (7) serves to remove the KOH solution, when the electrolyzer is in service and in the event of an accident The permanent electrical current is supplied through the rectifier (elektr toki to‘g‘rilovchi (vыpryamitel) asbob). Electrolysis is carried out at 80-85^{0}C temperature.

Olingan vodorod va kislorod gaz kanallariga keladi, keyin (12) kondensator da sovitiladi. Kondensatordan vodorod va kislorod (13) gaz yig‘uvchiga kelib sovitiladi va yuviladi, keyin esa (9,10) gidrozatvorlarga orqali vodorod gazgolderga yuboriladi, kislorod esa o‘zini gazgolderiga yoki atmosferaga chiqarib yuboriladi. Gidrozatvorlar vodorod va kislorod sistemalariga bir xil bosim berib turadi

The resulting hydrogen and oxygen are supplied to the gas channels, then cooled in the capacitor (12). Hydrogen and oxygen from the capacitor come to the gas collecting device (13), then it is cooled and washed out there is, followed by dispatching the hydrogen to the gasholder, through hydro shutters (9,10), and oxygen is expelled to the another gasholder or to the atmosphere. Hydro shutters supply same pressure to hydrogen and oxygen systems.

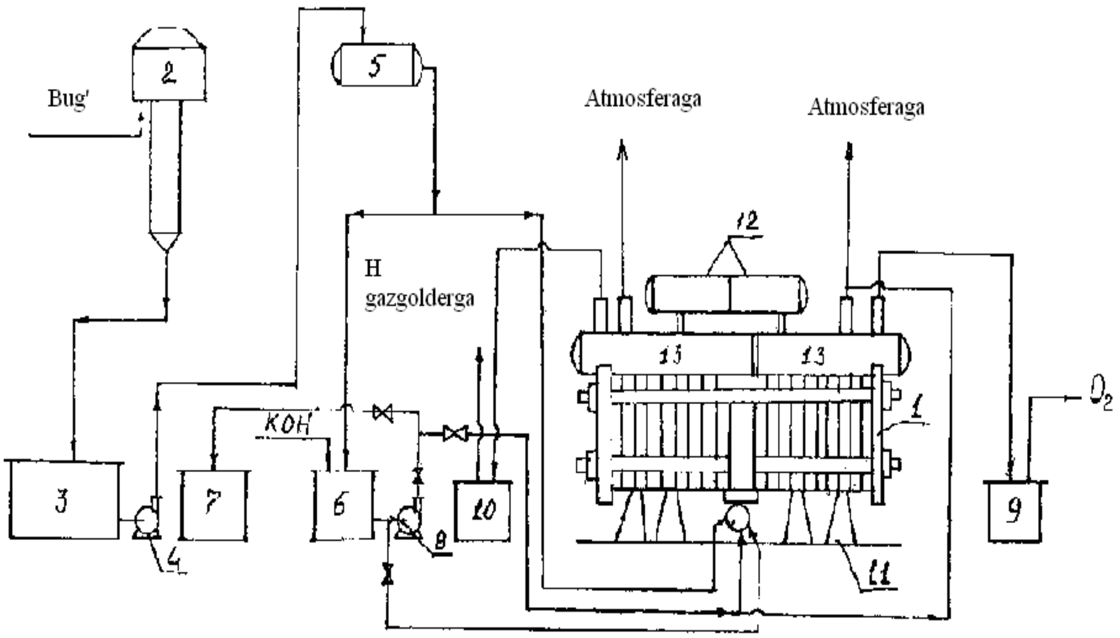

Figure 22. Technological scheme of the hydrogen production by electrolytic method

Test questions

1. Necessity of the hydrogen production.
2. Methods of hydrogen production.
3. Acquisition of hydrogen by water electrolysis method.
4. Hydrogen storage.
5. Hydrogen production with iron – steam method
6. Hydrogen production with natural gas conversion
7. Technological scheme of obtaining H_2 in the electrolyzer.
8. What is used as electrolyte in electrolysis?
9. How many electro energy consumed by electrolysis?
10. The success of the H_2 electrolysis method.

12 – LECTURE
THE TECHNOLOGY OF HYDROGENATION OF FATS AND OILS

Plan: The device of autoclaves and salomas. Preparation and dosing of the catalyst. Passport catalyst. Purification of reusable (circulating) hydrogen in continuous and batch hydrogenation processes. Composition and properties of hydrogenated nutritive and industrial oils. Hydrogenation methods. Saturation reactors. Technological scheme of hydrogenation by oil saturation.

Equipment for oil hydrogenation. Scope, functions, equipment classification. Column and autoclave reactors, gas lift, equipment for purification and drying of circulating hydrogen. Scrubbers. Safety rules when using autoclaves.

Key words and phrases

Hydrogenation; Continuous method; Autoclave; Regeneration; Hydrogenation regimes; Salomas; Boiling; Technical salomas; Hardness; Periodic method; Iodine number

Hydrogenation methods. Hydrogenation of fats is a liquid phase, a heterogeneous catalytic process. Hydrogen and solid - suspended or stable catalyst are used.

Hydrogenation is carried out by periodic and continuous methods. According to characteristic of the hydrogen action passing through the autoclave, methods are divided into the following types:

1. The method of sedimentation (to‘yinish usuli) - in which the hydrogen is circulated under pressure in the reactor and hydrogen is supplied to the reactor depending on its consumption. This method is widely used abroad.

2. The method of external circulation of hydrogen (vodorodni tashqi sirkulyasiyalash usuli) - hydrogen is supplied to the reactor in excess and released from the autoclave. Then, it is returned to the process after clearing. This method is widely used in the FIC(MDH).

3. Flowing method (oquvchi (struevoy) usul) - a stable catalyst is placed in the reactor. Interaction of oil with hydrogen passes through the catalyst layer.

Reactors (autoclaves) with mixer and without mixer, as well as columnar reactors are used for hydrogenation.

Autoclave (Figure 23) The reactor (1) with a capacity of 12.5 m^3 is made of acid resistant steel and comprises a spherical lid and a base. The valve (2), with tubular mixer, passes through the axis of the apparatus and it is connected to the electromotor (3) through the reduction gear. There is hatchway (lyuk) (4) on the device lid, the inlet and outlet of hydrogen, and the branch pipe for catalyst suspension. At the bottom of the reactor is a drainpipe (8) to unload the device.

The hydrogen bubbler (7) under the tube mixer, it is made of two circle tube diameters with a diameter of 2 mm. There is six pitch heat exchangers (5) ф along the perimeter of the device, three of which are used to heat the oil before hydrogenation, and the remaining three are used for cooling the salomas. For continuous hydrogenation there is a branch pipe (6) to empty the reactor. The vapor pressure of the reactor is 2.5-3.5 MPa. The permissible working pressure in the apparatus is up to 0.5 MPa and the temperature is up to 280 °C.

Technological scheme of continuous hydrogenation. (Figure 24). Continuous hydrogenation is performed in autoclave. It consists of three autoclaves, which are connected by gas lift or unloading branch pipe.

Refined and bleached oil, from collector tank(1), is continuously delivered to the autoclave (41) through the heat exchanger (3) (heated by the heat of the ready salomas), with the pump dosing unit (2). In this autoclave, the oil is heated up to 190-200 °C with high pressure steam.

The autoclave(41) is supplied continuously with the catalyst by the pump dispenser (16), from the collecting collectors(15), which are worked in turn.

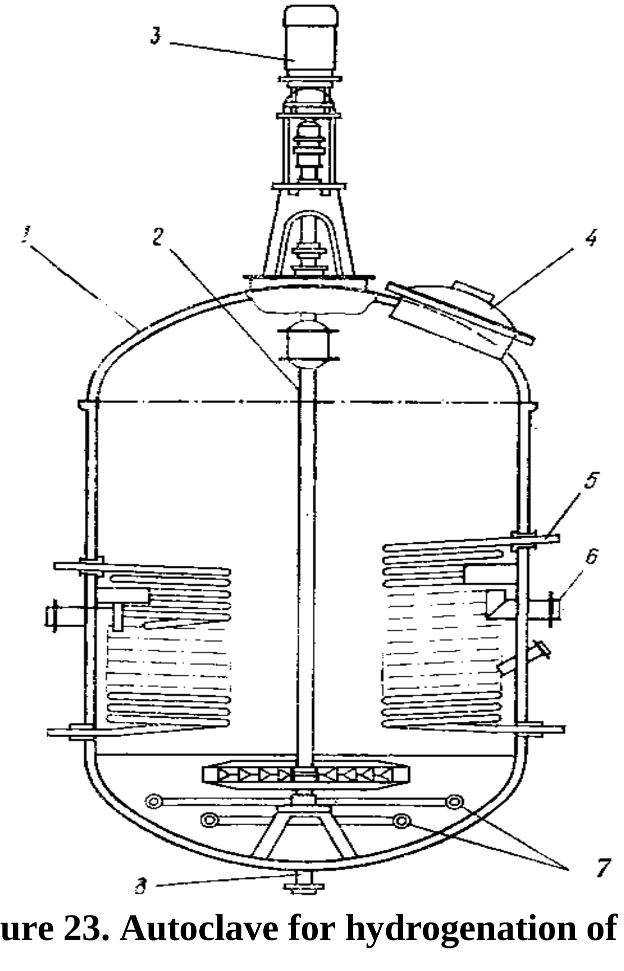

Picture 23. Autoclave for hydrogenation of oils

The catalyst is prepared in a ratio of 1: 4 or 1: 5 by mixing the used catalyst from mixer the(14) with the new catalyst from mixer the(13). The catalyst is dispersed to the autoclave, in the form of an oily suspension of 5%

concentration. Then it is poured to the second (42) autoclave with temperature 200-210^{0}C to, then the to the third (43) autoclave, with temperature 210-220^{0}C.

The ready salomas with the used catalyst comes to the salomas collector-defecator apparatus (5) through the gasseparator (12), heatexchanger (3) device, where the salomas is partially separated from the catalyst, then comes to the filter press (7) through the cooler (6) and separated from the catayst. The temperature of the salomas should not exceed 100^{0}C for food salomas, and 120-130^{0}C for technical salomas.

The filtered salomas (8) are collected in the collecting tank. The separated hydrogen, from gas dispenser, is dispatched to the gas purification system, it consists of two centrifugal droplets (17,20) separators with water and alkaline (18,19) scrubbers. (19a) The apparatus for separating the droplet of alkaline. The used hydrogen from the cleaning system comes to the mixer(21), where it is mixed with a new hydrogen. This compound is dispatched from the mixer(21) to the receiver with high pressure(23) by a compressor with a high pressure(22), where it is sent to the cooler (24) and cools down until 3-5 ^{0}C with brine (rassol) and come to the autoclave(41; 42; 43) by water separator(25). Hydrogen is drained by pressing and cooling down. The amount of water decreases from 25 to 40 g / m^{3} to 3 g / m^{3}.

If necessary, the hydrogenated oil is cooled by the cold oil from the tank (9) via the pump (10) through the cooler (11).

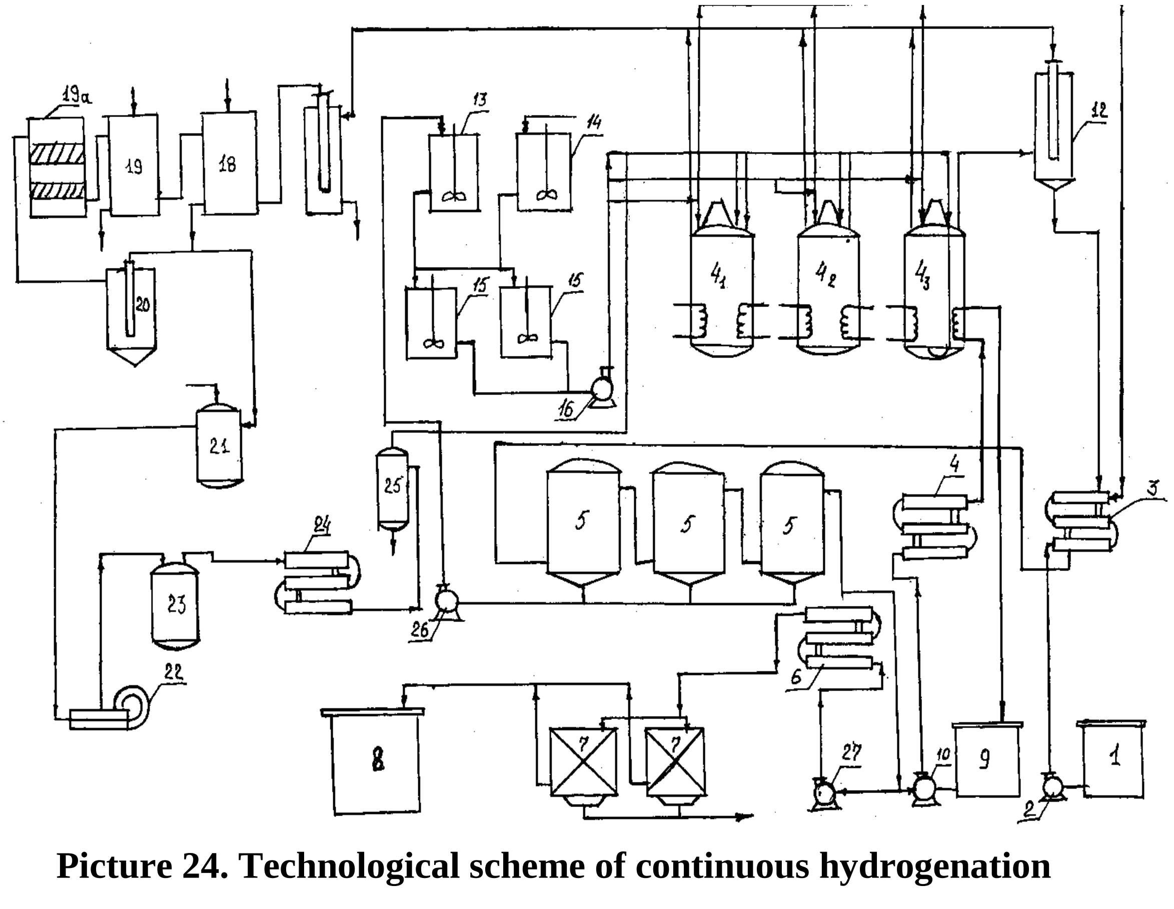

Picture 24. Technological scheme of continuous hydrogenation

The oil is dispatched to the autoclave from autoclave by using gaslift. The fuel gas of the gaslift is hydrogen. Gazlift is two-interconnected tube, which is installed into each other, that falls into the autoclave. Hydrogen is pumped through the inner groove, which has small holes in the lower part of the pipe. Hydrogen mixes with the oil and create mixture in a small specific weight.

This means that the fat in the pipe rises and is injected into the next autoclave through the connecting tube. The oil injection rate is controlled by the change in the hydrogen transfer. In the gas lift, the oil is better in contact with the catalyst, which results in full saturation of the fat.

Hydrogenation in a stable catalyst. The picture shows a continuous hydrogenation scheme in the reactor where stable catalyst is placed.

The raw material is supplied to the continuous vacuum drying device (15) through the heat exchanger(8) and the tubular heater(16) via the pump(2), from the tank(1). Then, it is suplied to the reaktor(7) from the collector(3), via the pump(4), through the steam heater (5) which together with hydrogen from the mixer(6). The salomas from the reactor come to the salomas collector and then to the heat exchanger (8).

After that, the salomas is pumped via the pump(9) through the tubular cooler (18) to the tank of finished product and pumped to the warehouse with pump (11).

The purified and the new hydrogen mixture from mixer(14) is dispatched to the mixer (6) via the compressor (13), through the reciever(19) and steam heater (12); then it is sent to the reactor (17). Hydrogen is conveyed from the salomas collector(17) to the purification system.

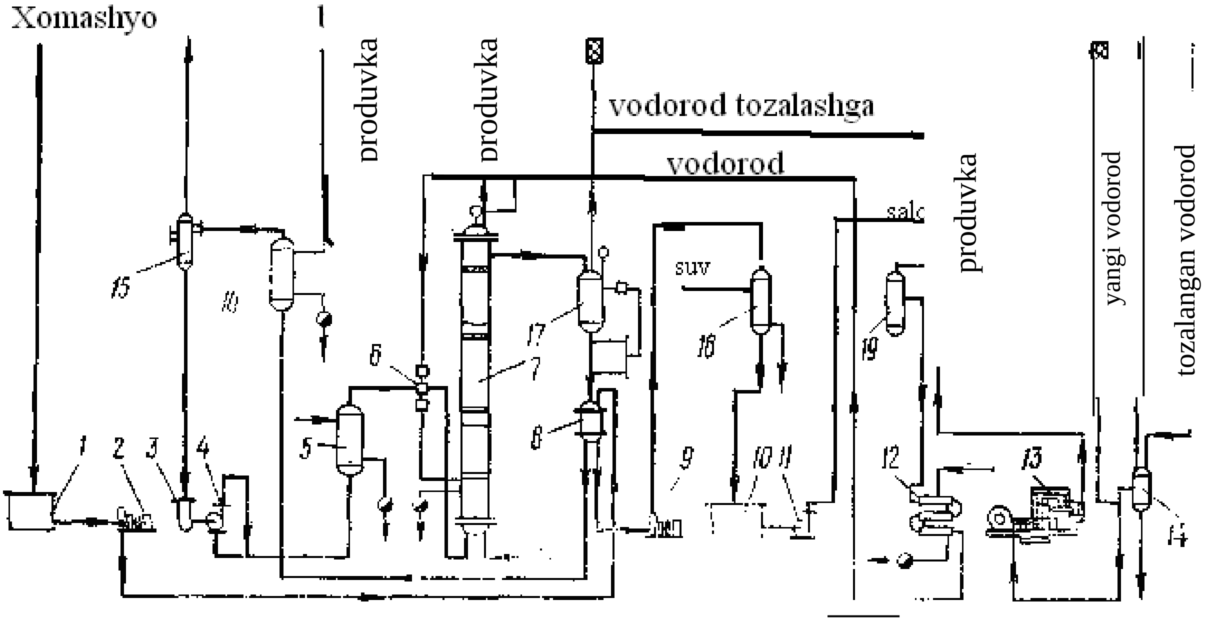

Figure 25. Technological scheme of continuous hydrogenation in a stable catalyst pillar reactor.

The hydrogenation with the participation of the constant solid catalyst is carried out under the conditions of 180-220 ^{0}C and pressure is 0.6-0.8 MPa and technical salomas is obtained.

The amount of hydrogen is 300-400 m^3 / hour and the reactor output is 0.6-1.5 t / hr. The amount of hydrogen supplied to a stable catalyst reactor is 6-10 times higher than the amount of hydrogen that can be consumed for hydrogenation.

During operation, during hydrogenation the stable catalyst loses its activation. For example, the alloyed durable catalysts have a life span of 1-3 months. Then the catalyst is regenerated in the hydrogenation reactors.

The alloyed catalyst, which is lost its activity, is washed with a hot solution of surfactants and made fat-free. Then it is treated with 1-2% alkaline solution for for saponification of salomas residue and bucking(ishqorlash) the catalyst. After curing the catalyst, it is washed with water and dried with hydrogen.

Technological modes of the hydrogenation process. The hydrogenation regime depends on the quality of the hydrogenating raw material and content of the fatty acid, the salomas, the hydrogenation device, and the type of catalyst.

Table 10

Technological regimes

Indicators	salomas			
	nutritional		technical	
	Brand 1	Brand 2	Brand 1	Brand 2
Capasity of the device, t/soat	6-8	6-8	4-6	3-5
Temperature,^{0}C (maximum)				
1st autoclave	200	200	200	200
2nd autoclave	210	220	220	230
3rd autoclave	220	230	230	240
The amount of hydrogen given to the device, m^3/hour	700-1000		700-1000	
Mass fraction of nickel in hydrogenating oil, %	0,1-0,2	0,2-0,4	0,2-0,4	
The ratio of the new and used catalyst	4:1	5:1	4:1	3:1
Average melting temperature of hydrogen, ^{0}C				
1-st autoclave	23	27	30	34
2-nd autoclave	27	30	37	42
3-rd autoclave	32	34	42	48

Salomas which is used in the confectionary, produced in the autoclaves by hydrogenation, in the following technological modes

Quantity of cotton oil, which are given to autoclave, t	6
Mass fraction of the nickel in the oil,%	0,25-0,35
The average ratio of the used and new catalyst	8:2

Starting temperature of the process, ^{0C}	190-210
Maximum temperature, ^{0}C	220
The amount of hydrogen, which is delivered to the autoclave, m^3/ hr	120-240
Average duration of the hydrogenation, hours	2,5

Salomas intended for margarine products are typically taken with autoclavic batteries at a pressure of 0,05-0,2 MPa, with a powdered nickel-copper catalyst.

Salomas which are in a low titer and in a high titer technical also obtained in these conditions.

In the case of a stable hydrogenation, the degree of unsaturation of raw material, at a gradual, decreases, in line with the ratios of the salomas indicators. This allows the process to be adjusted and monitored by hydrogen consumption and one of the indicators of the salomas, by melting temperature or by light - breaking indicator .

Regeneration of the catalyst. The regeneration process of the used catalyst consists of the following steps.

1) scrubbing(making fat-free);
2) boiling
3) cleaning the solution
4) drowning

The amount of fat in the used catalyst is in the range of 60-90%.

Scrubbing(making fat-free). It is carried out with a 5% solution of soda (Na_2CO_3) in the autoclaves with a capacity of 6 m^3. It is heated up to 105-107^{0}C and kept for 3-4 hours with stirring (50-60 rotation / min).

Then 1,6 m^3 hot NaCl solution is poured into the autoclave, it is stirred for 30 min., defecated for 6-8 hours. The oily layer is poured into the tank the medium layer is poured into the soapstock collecting tank. The below layer - the catalyst is washed 3-4 times in hot water, the amount of alkaline in the used washing water should be 2-3 g / l. The 2m^3 Na_2CO_3 solution is added to the one tons of the used catalyst.

Boiling. This process is carried out in the vats(chanlarda) where the catalyst is boiled for 6-8 hours with H_2SO_4. Nickel-copper catalyst is boiled with iron hydrate oxide. During boiling, $NiSO_4$ and $CuSO_4$ salts are formed. There are iron salts in the solution of these salts. So you have to clean them.

Cleaning. This process is made with the water of hypochlorite sodium zhavel. The following reactions take place.

$$CaOCl + Na_2CO_3 === NaOCl + NaCl + CaCO_3$$

$$2FeSO_4 + 2NaOCl + 2\ Na_2CO_3 + 3H_2O \longrightarrow 2Fe(OH)_3 + 2Na_2SO_4 + 2CO_2 + 2NaCl$$

The cleaned solution is filtered on filtrpresses and sent to drowning vat. There it is dipped with soda (Na_2CO_3).

Gidrogenlangan yog‘larni sifat ko‘rsatkichlari. Sanoatda ishlab chiqa-rilayotgan gidrogenlangan yog‘lar oziqaviy va texnik salomaslarga bo‘linadi. Oziqaviy salomas olish uchun yuqori sifatli o‘simlik moylari va eritilgan mol yog‘laridan foydalaniladi

Quality indicators of hydrogenated oils. Hydrogenated fats, wich are produced in the industry, are subdivided into nutritional and technical salomas. High quality vegetable oils and molten animal oils are used to get nutritional salomas.

Table 11

Nutritional salomas

Indicators	brands of the salomases			
	1	2	3	4
T_{melt}, ^{0}C	31-34	32-36	35-37	42-45
hardness, g/cm in 15^{0}C	160-320	160-320	500-700	Not determined
The amount of solid triglyceride, in 20^{0}C	29-37	29-40	>45	Not determined
Iodine number, % J_2	70-85	70-85	60-70	Not determined
Acid number, mg KOH, not more	1,0	1,0	2,0	3,0

1 - salomas for the production of margarine, it is obtained by hydrogenating of vegetable oils.

2 - salomas for the production of margarine, it is obtained by hydrogenating of mixture of vegetable oils and animal oils.

3 - salomas for the confectionery, it is obtained by hydrogenating cotton oil.

4 - salomas for the confectionery, it is obtained by hydrogenating palm kernel oil.

Table 12

Technical salomas

Indicators	brands of the salomases					
	1	2	3	4	5-3	6
Iodine number, % J_2, not more	65	65	65	55	17	1
Titr, ^{0}C	39-43	39-43	46-50	46-50	58	54
Acid number, mg KOH, not more	3,5	Not determined	5	Not determined	6	3
The amount of nickel, mg/kg, not more	20	60	20	60	20	20

1 - salomas from vegetable and animal oils (for perfume soap)

2 - salomas obtained from distillated fatty acids of soapstock (for perfume soap)

3 - salomas obtained from vegetable and animal oils (for household soap)

4 - salomas obtained from distillated fatty acids of soapstock (for soap soap)

5.6 - salomas obtained from vegetable and animal oils (for stearin).

Test questions

1. Methods of hydrogenation of fats.
2. The parameters of hydrogenation of oils.
3. Hydrogenation of oils in autoclaves.
4. Impact of the pressure and temperature on hydrogenation.
5. Hydrogenation in the presence of a stable catalyst.
6. Catalyst regeneration.
7. Indications of hydrogenated oils.
8. Technological scheme of continuous hydrogenation
9. Regimes of the hydrogenation.
10. Reactors of hydrogenation.

13 – LECTURE

TRANSESTERIFICATION OF OILS AND THE USE OF CATALYSTS

Plan: Transesterification of oils. Catalysts of the process of transesterification of oils and fats, their composition. The mechanism of transesterification of fats in the presence of sodium alcohol. Adverse reactions in the process of re-verification. Requirements for refining oils. Preparation of the catalyst.

14 – LECTURE

TECHNOLOGICAL SCHEME OF TRANSESTERIFICATION OF OILS

Plan: Periodic and continuous diagrams of the transesterification process, process indicators. Areas of application of transesterified oils and their properties. Comparison of the fatty acid content of transesterified fats with their basic properties.

15 – LECTURE

ENZYMATIC TRANSESTERIFICATION OF FATS

Plan: The specificity of enzymatic transesterification. Technological process modes. Enzymes used for the transesterification of fats and their needs. The mechanism of transesterification of fats in the presence of enzymes.

3-MODULE. MARGARINE AND MAYONNAISE PRODUCTION TECHNOLOGIES

16 – LECTURE

PRODUCTION AND RECIPE OF MARGARINE

Plan: Prospects for the development of the margarine industry. The concept of emulsions and types of emulsions. Raw materials and the recipe for margarine. Nutritional and quality requirements for margarine. Special varieties of margarine products; fatty raw materials; vegetable oils, hydrogenated, beef fats; transesterified oils.

Key words and phrases

Margarine; Culinary oil; Milk margarine; Milkless margarine; Emulsion; Confectionary oil; Aromatizer; Salt; Milk; Sugar; Emulgator; Vitamin; Colored item; Pasteurization; Recipe; Fermentation

Margarine was produced by French chemist Mej-Mure in 1869 as butterfat. He proposed to emulsify the faster soluble part of animal fat with serum in the stomach of animal. When the resulting mixture was cooled in the cold water, shiny, light, yellowish grains formed. Mej-Mure called them margarine, which means margjaret (French - pearl) gems.

Margarine is a small particle emulsion that includes fat, milk, salt, sugar, vitamins, phosphatides, emulsifiers, and so on.

The first margarine factories were commissioned in the FIC in 1930 in Moscow and St. Petersburg. At present, there are 38 plants in the FIC, with a capacity of more than 1 mln. 400 thousand tons of margarine products are produced. There is preparing hard and soft margarine in our country, in the Tashkent oil-fat enterprise.

The nutritional value of the oils is determined by their energy value and physiological effects. The digestion of margarine, into a human body, is not inferior to milk fat but it is higher than milk fat by energy value. This is illustrated in the Table 13 below.

Table 13

Energy values of fats

Fats	average energy value, kJ	digestion into a human body, %
Milk oil	38,64	93-98
Cotton oil	39,48	95-98
Sunflower oil	39,23	95-98
Sheep fat	38,84	74-84
Animal fat	38,84	75-83
Butter	32,51	93-98
Margarine	32,61	93-98

As can be seen from Table 13, digestion of margarine, in the human body, is not inferior than butter, and energy value of margarine is superior than butter.

As you know, the fats in the form of emulsion in tiny particles are digested well in the human body. It also affects the melting temperature, taste and smell of fat. Therefore, the mixture of fat which is used for margarine is so selected that the melting point of the finished product should not be above 31-34 °C. Essential (unsaturated) fatty acids, in the margarine, increase their physiological value. The nutritional value of fat and its products depends on the content of fatty acid and glyceride of the fat, as well as there is, phosphatides, fat-soluble vitamins, sterols, carotenoids and other physiologically active substances, in it.

As a result of long-term biological research, it has shown that dietary fats, for diarrhea and for atherosclerotic patients, should contain up to 40% linolic acid. Natural vegetable oils are in a liquid form, which limits their use, especially in bakery and confectionery industry. The margarine is without these limitations, and can be obtain the product, which is used in various industries with altering the technology of recipe and preparation.

Assortment of margarine products. Margarine products are divided into the following types:

1. Margarines (fat and milk or water emulsion) the amount of fat in the content of them should not be less than 82%. (milky margarines).

2. Fats (for confectionery, bakery products and cookies), fat content up to 99.7%.

Depending on the use and recipe, margarines are divided into the following categories:

- margarines of the kitchen and best margarines;
- for processing industry and catering;
- margarines with taste additives (fat content should not be less than 62%).

Margarines can be in a hard, soft and liquid form. Soft margarine is used as butter of sandwich. Liquid margarines are used in the production of bakery products and flour confectionery products.

Margarines in the kitchen group are also used as sandwich products, as well as for the production of confectionery and culinary products. Margarines (milky) in the kitchen group "Noviy", "Era" are prepared at least 82% of fat content.

Best margarines contain various types of fat - several types of salomas, coconut or palm kernel oil, re-esterification oils and other additives.

Low-calorie margarines, "Stoloviy", "Raduga", "Solnechniy", "Gorodskoy", contain from 40 to 75% of fat, including 23-40% salomasses with various melting temperature and re-esterification oils which are made from liquid vegetable oils. Apart from that, the "Zdorove" dessert margarines, which contain a mixture of transesterificated oils and phosphatide, are also produced.

Margarines are designed for confectionery, bakery products and public catering, with a fat content of тще less than 82%. In the content of the margarines with taste ingredients (chocolate) contain cocoa powder, large quantities of sugar and they are used for making confectionery products. Confectionary oils are produced in the following assortments:

- for biscuits, chocolate and waffle products
- to prepare cake
- the hard fats on the basis of the transesterificated oils
- transesterification oils.

The oils which are used for the bread products are prepared in a liquid form by adding phosphatide.

Culinary oils contain various ingredients such as salomas, re-esterification oils, vegetable oil. Some culinary oils also contain animal fat.

The main raw materials for the production of margarine. The main raw material for the production of margarine is fat and milk. The organoleptic and structural properties of margarine are assessed by the quality of the fat contained in it. The presence of aromatic and flavoring oils, dyes and free fatty acids does not allow the production of high quality margarine.

Because of this, all oils which are used for margarine production should be completely refined, bleached, deodorized, and should not have an acidity number higher than 0.3 mg KOH.

Oily raw material. Vegetable oil is the main raw material and it is used in a liquid and hydrogenated (salomas) form. Sunflower, cotton, rapeseed and soybean oils are widely used for this purpose. In addition to these oils, the cotton palmythine with melting point of 19-25^0C, which is separated from the cotton oil at 6-8^0C, is used in a deodorized form. The main component, of the margarine product recipe is hydrogenated oils. Their main quality parameters of them, are: color, melting temperature, organoleptic indicators, hardness and plasticity of the product.

Animal oils, butter, melted animal oil and sheep oil, are used. Animal oils are used only to produce margarines with high quality. It is not allowed to use the butter with unpleasant odour and taste. Animal oils should not contain unpleasant odour and taste, and the acidity number of animal oils should not be above 1.1 mg KOH. However, animal oils are used either naturally or transesterificated and hydro transesterificated form.

Milk is an important component of margarine product, it gives pleasant taste and smell to margarine, it increases nutritional value of margarine. For the production of margarine, milk is used in a fresh form, pasteurized form, in a fermentated form with lactic bacteria or in a coagulated form with citric acid. Depending on recipe of margarine pasteurized and biologic fermentated milk is added to the margarine.

Fermentated milk not only enhances the taste of margarine, but also increases its shelf life. Water-milk phase medium in the margarine should be pH = 3.0-5.5. This weak acidic medium prevents unnecessary microbiological processes in the storage of margarine.

Pure milk has a complex chemical composition, depending on the type of animal, feeding mode and feed. Milk contains all the amino acids which are needed for living organisms. The amount of casein, which is from a group of phosphoproteins, is about 80% of the total protein in milk. Casein forms colloid, in a calcium casein form in the milk. This substance is resistant to high temperatures, but it is not resistant to lemon and lactic acid. Another protein of milk is albumin. The difference of albumin from casein is that it does not store phosphorus. Albumin is soluble in milk, but it is coagulated at temperatures above 60^0C and forms difficult separateable drainage. The proteins in the milk are good nutrient medium for the development of microorganisms.

Milk sugar improves the sweet taste of milk. Under effect of ferments and microorganisms, milk sugar is hydrolyzed and forms lactic acid. The milk contains fat-soluble and water-soluble vitamins A, D, B, E and C. They do not have a constant quantity.

Milk microflora. Milk is a good environment for the development of microorganisms, and some of them may change chemical and biological content of milk. The basis of bacterial microflora is bacteria, yeast (drozhji) and molds.

Bacterial cells are sensitive to temperature and when the milk temperature exceeds 60 ^{0}C, most of them die. Some bacteria can form spores and stable to temperatures up to 120^0C. Bacteria are divided into intestinal bacteria, putrefactive (chirituvchi) bacteria, bacteria with fatty acid and lactic acid, fermentative bacteria. From a sanitary point of view, the amount of intestinal bacteria is a fecal pollution and some can lead to bowel disease(ichak kasalliklari).

Putrefactive bacteria multiply when milk is taken and carried under non-compliance sanitary conditions, it can give a strange bitter taste to the milk. Some of the members of this group have a negative effect on the coagulation process of milk, using citric acid. Putrefactive bacteria break down the proteins and the resulting ingredients give a bad odour to the milk. This group includes spores of aerobic bacteria. They spoil the milk quickly, and even convert it into mucous (quyuq)mass, which have not got acidity.

Oil acid bacteria rapidly fermentate sugar and lactic acid. As a result, oils are formed with burn aroma. They are sensitive to the acidic environment and their loss occur when the milk is heated on the temperature higher than 100 °C. While fermentation process of milk by yeast, sugar is fermentated with separation to carbonate and alcohol. The rapid development of the yeast in the fermentated milk, creates yeast taste in the milk.

Mold cells fall into milk with air, dust, animal hair, and others. Molds tend to grow slower than bacteria and yeast. They break down the proteins into ammonia, some of them break up fat into fatty acids and glycerine. Molds quickly destroy milk. Milk which is taken to the margarine plants should be immediately pasteurized. If the milk acid number is more than 23^0 T, it is not pasteurized.

The concept of emulsion. Margarine contains a fat-oil emulsion in a solid form. Emulsion appears to be homogeneous when viewed from the outside, but in fact, one substance is dissolved in small droplets. There is two type of emulsion:

- straight-emulsion unpolar liquid (oil) in a polar (water) liquid, O-W;
- reverse emulsion polar liquid(water) in a unpolar liquid (oil), W-O.

The mixed type of emulsion may be present at high concentrations of oil in water. For example, butter. As a result, the butter is not sprayed when melted. It is attempted to form a mixed emulsion, when produce margarine.

The combination of separate drops of liquid due to the excessive free energy on the surface among phases, indicates that the emulsion is aggregatively unstable. In practice, this leads to the complete disruption of the emulsion and its separation into two layers. Specific stabilizer emulsifiers (SFM) are used to achieve aggregative stability. Hydrophilic emulsifiers are well water-soluble and form O-W emulsion, while hydrophobic (oleophilic) emulsifiers are well-soluble in the oil and stabilize the W-O type emulsion.

From the thermodynamic point of view, the emulsion is adsorbed into boundary of the phases as the shell and reduces the inter-phase tension and prevents from merging of the particles combining and keeping them in a disperse phase. As a result, it provides aggregative stability of the emulsion. As thickness of the adsorbsion layer is smaller, as less emulsifiers are required.

Emulsifier molecules are characterized diphil characteristic, they consist of the hydrocarbon radical (unpolar part) and polar group. Their emulsification ability is depend on the balance of polar and unpolar groups. A well-balanced characteristic molecule is phosphatidylcholine (lecithin). It is used for the synthesis of emulsifiers, which are used for industry.

Emulsifiers for production of margarine:

- should have nutritional value and should be physiologically harmless;
- should strengthen high dispersibility and stability of emulsion;
- should keep moisture content in the margarine during mechanical processing;
- should have anti- sprinkling properties;
- should ensure stability of margarine during storage.

The main task - besides strengthening the emulsion, emulsifiers increase the plasticity of margarine and show some special properties when producing oils for bread products. (increases product volume and porosity). T-1, MGD, T-2, T-F emulsifiers are used in the industry. One gram of butter is 9-25 billion oil particles and 8-16 billion water drops. The T-1 emulsifier is obtained by the etherification of glycerol with fatty acids.

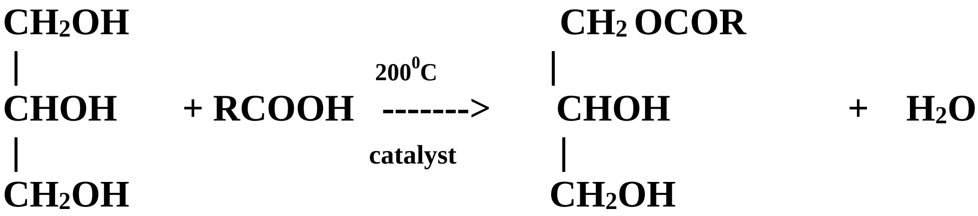

$$\begin{array}{l} CH_2OH \\ | \\ CHOH \\ | \\ CH_2OH \end{array} + RCOOH \xrightarrow[\text{catalyst}]{200^0C} \begin{array}{l} CH_2OCOR \\ | \\ CHOH \\ | \\ CH_2OH \end{array} + H_2O$$

T-1 (monoglyceride)

The MGD emulgator is a mixture of mono and diglyceride. Quantity of monoglyceride is 45-50%.

T-F emulsifier is a mixture of T-1 emulsifier and phosphatide concentrate at 3: 1 ratio.

MGD emulsifier is obtained through the reaction of glycerolysis – transesterification of triglyceride with glycerol:

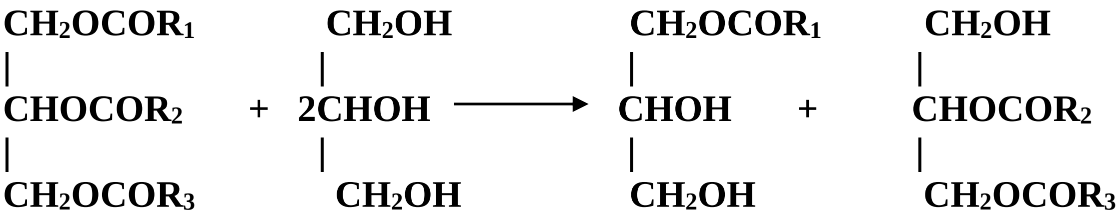

$$\begin{array}{l} CH_2OCOR_1 \\ | \\ CHOCOR_2 \\ | \\ CH_2OCOR_3 \end{array} + \begin{array}{l} CH_2OH \\ | \\ 2CHOH \\ | \\ CH_2OH \end{array} \longrightarrow \begin{array}{l} CH_2OCOR_1 \\ | \\ CHOH \\ | \\ CH_2OH \end{array} + \begin{array}{l} CH_2OH \\ | \\ CHOCOR_2 \\ | \\ CH_2OCOR_3 \end{array}$$

Preparing a recipe for fat phase. The appearance, quality and taste of the margarine depends on its content, the type and amount of additives.

Oily basis of margarine is a mixture of various oils. Melting temperature, hardness and the amount of solid phase are the main indicators of margarine. The melting temperature of the margarine depends on the composition of the oily base. For the formation of moderate structure, it is added several types of salomases with different melting temperature, transesterificated oils and liquid vegetable oils to the margarine. The recipes of fatty basis, for confectionery, bakery products and culinary oils, are based on their use.

Preparation of water-milk phase recipe. The water-milk phase should provide producing the margarine with organoleptic indicators which are similar to butter.

Margarine contains milk, salt, sugar, water and other water-soluble additives. The amount of water-milk phase of recipes of margarines, which are for the kitchen, for communal nutrition networks and which are used for processing, are 17,75%. In other types of products, such as some of the varieties of chocolate margarine, the water-milk phase is up to 37.8%. Low-calorie margarines can contain up to 30%. Fermentated milk or flavoring is added to it, to ensure the taste and smell of margarine. The amount of milk that can be added depending on the type of product, can range from 4.5 to 18%. For example, up to 18% for chocolate margarine, 15% for selected sandwich margarine and from 4.5 to 9% for kitchen margarine.

Salt is used to give light, salty taste to the margarine and as a preservative (conservant), in the amount of 0.15-1.2%. Salt reduces sprinkling when the margarine is heated. Salt do not add to the margarines, which are used for cream, chocolate as well as to the culinary oils.

Sugar is used as another supplement. In addition to the main function of sugar, it increases the nutritional value of the finished product.

It is added 0.3-0.5% of sugar to the main types of margarine, up to 18% is added to the chocolate margarines and it is not added to the liquid margarines which are used for bakery products.

In the production of margarine, it is added **water** to melt sugar, salt, dry milk; to replace the milk in the production of milk free margarine, to normalize low milk margarines.

In order to avoid acceleration of the oxidation process in the finished product, the water should be bacterial clean, should not contain dissolved salt and iron compounds.

Preparation of recipe components. Preparation of emulsifier solution. The amount of emulsifier (T-1, T-F. MD, MGD), which is added to the margarine with 82% of fat content, is 0.1-0.5% in the industry. The emulsifier is added, in the amount to 0.8% to the margarine with fat content of 75% or less than it.

The emulsifier is dissolved in the deodorized oil at a temperature of 60-65^{0}C at a ratio of 1: 4 to ensure the uniform distribution of the emulsifier in the fat phase and to increase its effectiveness. The MGD emulsifier is dissolved at a temperature of 90^{0}C at a ratio of 1: 10.

Preparation of dyestuffs and vitamins. In the dyeing process of margarine, it is used fatty solution of carotene or annatto. The fatty solution of carotene is obtained by extracting the dyes of carrots and pumpkins in the refined sunflower oil.

Dyestuffs are brought in oily solutions in the tins and flasks(flyagalar). 1 kg of fatty solution contains 2-2,4 grams of dry β-carotene or 1-1.2g annato.

Vitamins are added to each of the selected and dietary varieties of margarine and culinary fats, to increase their biological value.

Vitamins A and B are dissolved in deodorized oil at a ratio of 1: 10.

Vitamin C is used for the production of dietetic margarines.

Storage and preparation of fats. Refined oils are nonresistant to storage because their natural antioxidants are removed. Therefore, the storage of refined and deodorized oils should not exceed 24 hours and be kept separately, depending on their type. Storage tanks have steam suit, which keeps warm temperature, with the help of warm water. The temperature in the storage tanks should not exceed 25^{0}C for liquid oils. For solid fats they should be 5-6^{0}C above than the melting point.

It is recommended to store in the inert gas atmosphere to extend the shelf life of refined oils. It is used nitrogen or carbon dioxide as such gases in the plants.

Preparation of aromatizers. Flavoring and aromatizers are used to improve flavor and taste, as well as in the increasing of organoleptic properties of margarine products. Oil and water-soluble aromatizers are used in the aromatizing of margarine. They are a mixture of various organic compounds. Fat-soluble aromatizers have a sharp smell when concentrated. The water-soluble compositions have a light, fragrant smell. They are added in a mixture form with fat-soluble aromatizers to the margarine. Several different aromatization compositions have been developed by the VNIIJ. They are added depending on the type and usage purpose of margarine. It is used aromatizers with milk taste and odour, for many types of margarine.

For the selected and sandwich types of margarine, they are used aromatizers with smell and taste of butter or melted butter.

The aromatics are added to a fatty mix or to a water-milk phase in a certain amount (1.2-100 g per 1 tons).

Preparation of butter. It is added 10% of butter to the butter type of margarine. Before use it is separated from the container and parchment(pergament), removed the upper layer with a knife. Because there is, unpleasant organoleptic properties and microflora are much higher, than the other part of the mass. The fatty mass is divided into parts, with weigt of 2-3 kg, with the fat-cutter and melted in the special tank at 40^0C.

It is shown the recipe of margarines with milk in the table 14, the recipe of soft margarines in the table 15, and the recipe of culinary fats in the table 16.

Table 14

Recipe of margarine with milk

Components	kitchen	buttery	extra
	amount, %		
Salomas, T_{melt} 31-34^0C, hardness 160-320 g/cm	46	50	26
salomas, T_{melt} 35-36^0C, hardness 350-410 g/cm	11	8	12
cotton palmythine, T_{melt} 18-22^0C	8	-	8
vegetable oil	16	15	10
coconut oil	-	-	25
butter	-	-	-
dyestuff	0,2	0,2	0,2
milk	12	8	16
emulsifier	0,2	0,2	0,2
salt	0,4	0,3	0,3
sugar	0,4	0,3	0,3
water	6	8	2
Total	100	100	100
Fat, including milk fat	82	82	82

Table 15

Recipe of soft margarine

Components	amount, %
salomas, T_{melt} 31-34^{0}C, hardness160-320 g / cm	15
salomas, T_{melt} 35-37^{0}C,hardness 550-750 g / cm	10
vegetable oil	25
coconut oil	9
dyestuff	0,3
emulsifier	0,4
salt	0,3
milk	15
water	25
Total	100
Fat, including milk fat	60,25

Table 16

Recipe of culinary fats

Components	confectionery oil for biscuits	vegetable oil	Culinary oil	
			sharq	Belorus
salomas, T_{melt} 31-34^{0}C, hardness 160-320 g / cm	73	70	65	35
animal fat	24	-	-	30
sheep fat	-	-	15	-
vegetable oil	-	10	10	20
cotton palmythine	-	20	10	15
phosphatid concentrate	3	-	-	-
Total	100	100	100	100

Test questions

1. The need for margarine production
2. Margarine recipe
3. Variety of margarine products
4. Main raw materials for margarine production
5. Margarine - what's this?
6. Margarine is made by whom?
7. Nutritional value of margarine
8. The concept of emulsions
9. Emulsifiers used for margarine

17 – LECTURE

PREPARATION OF MILK AND INGREDIENTS

Plan: The use of milk in the production of margarine. Requirements for its composition and quality. General information about microflora. Water-milk-fat emulsion in margarine. Creation of a recipe for a margarine fat base. Milk pasteurization and sterilization, application, technological mode, equipment used. Fermentation of milk.

Milk has a complex chemical composition, which depends on the breed and the mode of feeding the livestock.

Structure of cow's milk in %

Water	from 87 to 89
Oil	3.0-6.0
Proteins	3,4-4,0
Lactose	4,0-5,5
Mineral substances	0.6-0.8

Protein is milk albumin, milk globulin and casein. Compared to the total protein content, casein can comprise 80%.

The presence of a dry residue in the milk represents the nutritional value of milk, and their decrease indicates that the milk is diluted with water. At the first stage of milk preparation, heat treatment is provided to remove microflora. Two methods, pasteurization and sterilization are used in this process. At pasteurization, the milk is heated to a temperature not exceeding 100^0C, and in sterilization the temperature rises up to $120\text{-}130^0$C.

At the pasteurisation, the vegetative form of bacteria dies, but spores of bacteria are preserved; in the sterilization, all forms of the bacteria die. When milk is heated to high temperatures, proteins of lactose and amino acids come into contact and occur amino-carbonil bonds, they make milk color brown. In the case of heat treatment, lactic fat changes slightly, but the activity of enzymes and vitamins disappears. All these changes are intensified when the temperature is affected for a long time. It is not possible to expect the expected quality changes when it is heated quickly up to high temperatures. The most effective heat treatment is the sterilization at high temperature at 120^0C. Pasteurized or sterilized milk should be cooled rapidly.

There are two methods of pasteurization.

1. Short pasteurization, ie heating and cooling at 90-95 ^{0}C for 8-10 seconds.
2. Long pasteurization, ie heating and cooling at 65-75 ^{0}C for 25-30 minutes.

It is pasteurized in a combinated method, to completely eliminate the bacteria. After pasteurizating at $90\text{-}95^0$C, it is maintained at this temperature of 20-30 minutes in the fermentating bath and then cooled.

For pasteurization, various types of devices are used: long pasteurization baths, pasteurizer with squeezing drum, plate and piped pasteurizers.

Plate pasteurizers. It consists of stainless steel plates, when they are collected, channels are formed and processing milk moves from these channels. The plates are assembled on a common base (plate) and bolted with bolts. During the assembly, four sections are formed. In section V, the new milk is heated by heat exchanger through pasteurized milk. In section B, milk is pasteurized, and in the A - section milk is pre - cooled. If the milk is not intended for immediate fermentation, then it is put into G - section and cooled with pickle (namakob) to 8-10^{0}C. During mixed pasteurization the milk does not cool, contrary it is stored immediately at 90-95^{0}C in the bath.

It is used an automated P8-OUV device for high-temperature milk processing. In addition, PT-5 pipe pasteurizer is also used for pasteurization of milk. Its productivity is at 500 l / hour at 110^{0}C. PT - 5 pasteurizer consists of two horizontal heat exchangers, they consist of pipes. In each heat exchanger, the milk moves straight and opposite, in the tubes. Part of the pasteurized milk is dispensed to the fermentation. The second part, ie which is added in the nonfermentating form to the margarine, or which is used by mixing with fermentated milk, comes to the tank to the storage, as well as it is expended on the recipe. The second stage of milk preparation is fermentation, it is implementated by biological method or acidic coagulation.

Biological fermentation are used to obtain dairy product with acidity of 70-100^{0}T, in the structure of sour cream, with lactic acid taste and smell. Biological fermentation is caused by the fermentation of milk sugar under the effect of lactic acid bacteria. Initially, milk sugar breaks down into glucose and galactose. Then it turns fully into glucose under the influence of enzymes. Then, the glucose is converted to wine acid and then to lactic acid with intermediate products.

When the fermentation begins, simultaneously with the hydrolitic disintegration of milk sugar, its isomers, dextrin polymers, are formed. Together with the proteins, they produces fermentated milk, in a sour creamy shape, in a viscous consistency.

Fermentation is made, with adding specially prepared specific strains of lactic acid cultures to pasteurized milk.

Depending on the nature of the product, fermentation with lactic acid bacteria is separated into gomo and heterofermentative form.

In homofermentative fermentation, sugar of milk is converted to lactic acid. Lactic acid and used citric acid increase milk acidity. As a result calcium caseinate is disintegrated and the occured casein coagulates. The dark mass, with strange taste and in the form of sour cream, is formed.

In the case of heterofermentative fermentation except lactic acid there are form alcohol, vinegar and other volatile acids. In the milk with good quality, there is up to 10% vinegar acid, 0.2% ethyl alcohol and an optimum amount of carbonate acid, to the total acidity. Volatile acids and alcohol form small amounts of ether, mainly ethyl acetate in the fermentation.

The fragrant odour in fermentated milk is characterized by the amount of diacetyl $CH_3COCOCH_3$ and atsetoin $CH_3CHOHCOCH_3$ which are formed mainly in attendance of glucose and citric acid. In this case the excess atsetoin is generated. Diacetyl is an unstable substance and when it is disintegrated the atsetoine and 2,3-butyleneglycol-$CH_3CHOHCHOHCH_3$ occur. Therefore, after 2 to 3 days of fermentation, the fragrant smell disappears. It is used enzymes of lactic with content of 60-70% Streptococus diacetilactis and 30-40% Streptococcus cremoris for fermentation of milk. The yeast composition is prepared by VNIIJ and it is sent in dry form, in the hermetically sealed flasks to the plants. The initial yeasts are prepared from this yeast.

In milk processing plants with a low capacity, in the plants which are process about 4000 liters milk, it is allowed to use from initial yeast directly, which can be used for 3-5 days. In the large milk processing plants, worker yeasts are prepared. Worker yeasts are made from natural milk. For this purpose, there are used fermentator or baths with low capacity. Milk is kept warm for one hour, after pasteurization, then cooled to 28-30^{0}C, then it is poured initial yeast, at a rate of not less 1%, stirred and not touched for 9-12 hours until full fermentation. The ready worker yeast, with acidity 60-70 ^{0}T, is cooled to 6-8^{0}C and stirred before use. Baths, universal tank or tank-cultivators are used for milk fermentation and storage. Milk fermentation gives the margarine a milky and fragrant taste and increases the shelf life. Lactic acid, which is produced during fermentation, prevents the development of microflora that may occur in the margarine.

Without fermentation, the fresh margarine can not be stored long, ie quickly spoils. Milk is added to the margarine in the fermentated or non-fermentated form, in the ratio of 1: 1, 1: 3 by stirring. Milk-acid bacteria are used to fermentate milk, they are divided into gomo-and heterofermentative groups.

Fermentation bath (Fig. 26) consist of a paddle trumpet mixer (1) and a cover (2). Bathroom steam jacket (3) is used for heating and cooling milk. The tubular mixer (1) consists of a series of horizontal parallel pipes. The inner surface of the bath is made of stainless steel. After pasteurization, the milk can be maintained for a long time, if necessary. Pasteurized milk is given at 70-90^{0}C to fermentation bath or tank. Then, it is cooled to 30^{0}C and added 1% of the worker yeasts to the milk volume. Then it is stored for 5 minutes in a calm state. When the acidity reaches up to 60-65 ^{0}T, the processing milk is immediately cooled to 15-20 ^{0}C.

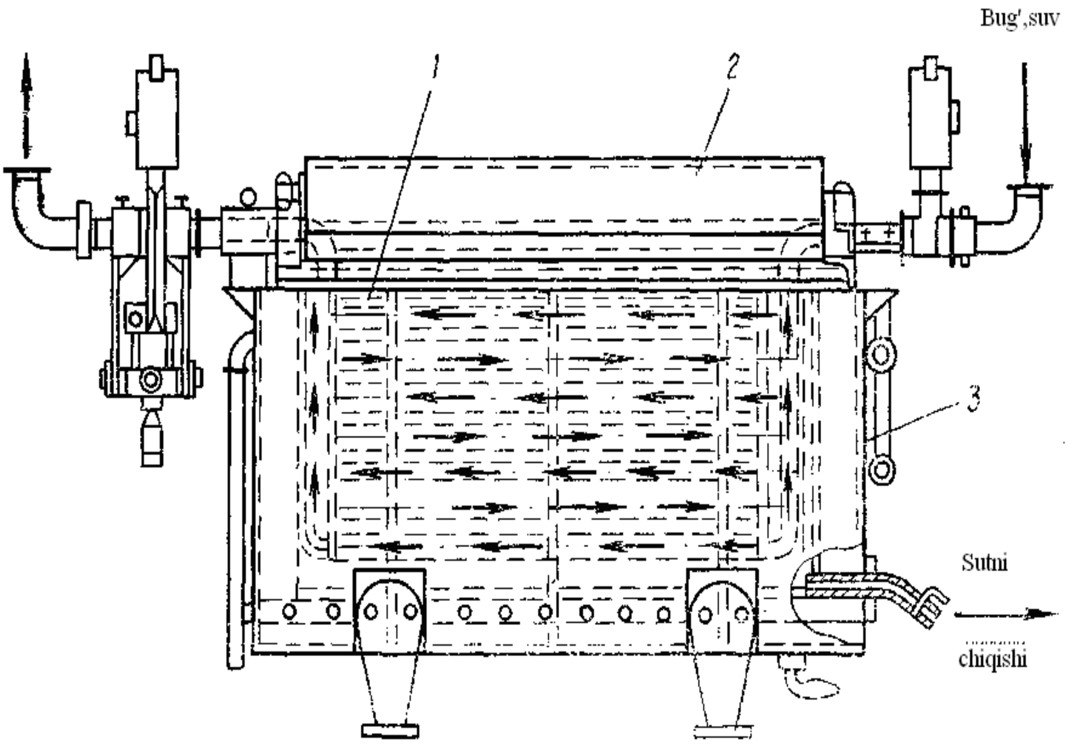

Figure 26. The scheme of the fermentation bath

Continuous fermentation. This method is based on the development of sour milk bacteria at the milk flow, at the active growth phase.

Advantages: The activity of microorganisms increases with the continuous addition of the nutrient medium and the production capacity of the equipment increases by 4-5 times. At the same time, there is a condition for automation of the process.

In the continuous fermentation, pasteurized milk is fed to the tank-cultivator at 70-90 ° C and stored for 1 h. Then cooled to 30^0C, 1% of yeast is added and and stirred for 5 minutes. When the acidity of the milk reaches 58-59 ^{o}T, the process is implemented into continuous form. For this purpose, 1 portion of fermentated milk, from the tank-cultivator, is added to pasteurized and heated to 30 ° C milk, in this amount.

Acidic coagulation is that, milk is cured with 10% citric acid at 18-20 ^{0}C. Lemon acid is added to the milk after adding salt and sugar.

Components by recipes and their preparation.

Phosphatide concentrate. It is obtained from the new vegetable oil (sunflower, soybean) and is used as an emulsifier and added to increase the nutritional value of culinary oils.Posphatide concentrate should not contain less than 50% of phosphatide and its moisture content should not exceed 4% .It is dissolved in the ratio M: F = 4: 1.

Salt. It is added to improve the taste of margarine, and salt is a preservative.

Sugar. It enhances the taste of margarine.

Colorants. It is used fat-solubletion of carotene or annato, to give light yellowish color to margarine, which is similar to butter. Extraction of carotene (A-provitamin) carried out by extracting colorants of carrot or vitaminous pumpkin. There is used cleaned sunflower oil. At the present time, the B - carotene derived from bacterial family Blaceslea trispara by biosynthesis is used. Annato - dyes are obtained by dissolving the pigments present in the Indian Orpy tree by the method of vegetable oil dissolution.

Vitamins. They are used to increase margarine's biological properties. There are 0.8 to 12 mg vitamin A and 0.001 to 0.008 mg D-vitamins in the 100 g butter.

To make similar to the butter by vitamins content, it is added vitamins A, D, E, and C to the Margarine. (Extra, Osoby, Slovenian, and Zdorove).

50 MY of vitamins are added per one margarine. (MY - the international unit of measure). As a unit of international measurement, vitamin A in pure crystals is accepted, with biological activity of 0.3 γ (1γ = 10^{-9} kg or 10^{-3} mg). This corresponds to 0.68 γ of pure-β carotene. E-vitamins are added in 300 mg per 1 kg of margarine "Zdorove" (1M E = 0.3mg).

The fragrance-enhancing additives are used to taste the margarine and improve its organoleptic properties. Aromatizers are a mixture of the following organic compounds: diacetyl, low molecular saturated fatty acids (from C_2 to C_{12}), δ - deca and δ - dodecolanthanes, atsetine, oxy acids, glycerol, ethyl alcohol and other substances. They are taken at specific exact rates.

Various flavors have been developed by the VNIIJ Scientific Research Institute. They are used depending on the area of margarine. For example: VNIIJ-31, VNIIJ-32 for culinary oils, and VNIIJ -10 is added to milk margarines.

Test questions

1. Recipes of milky and soft margarine, of culinary oils
2. Preparation of milk, pasteurization
3. Fermentation of milk
4. Taste and flavoring additives (flavorings). Milk content.
5. Methods of pasteurization of milk
6. Pasteizers used for pasteurization of milk
7. The scheme of fermentation of milk
8. Yeasts used for milk fermentation
9. Continuous fermentation

18 – LECTURE
MARGARINE PRODUCTION TECHNOLOGY

Plan: Dosage of Prescription Components. Mixing. Supercooling and crystallization of margarine emulsion. Schemes of margarine production technology. Bulk margarine production. Production of confectionery, culinary and bakery fats and oils. Storage and transportation of margarine products.

Key words and phrases

Emulsification, mixing, dosing, cold cooling, structure, crystal structure, vatator (super cooler), decrystalization, do parcel post, consistency, yeast

Margarine production includes the following operations: dosing, mixing, emulsification, supercooling, crystallization and packaging.

Dosing. Two methods of dosing are known: by weight and size. Dosage by weight ensures the exact amount of components. The following scales are used to determine the amount of components: device with dial (siferblatli qurilma) and device with box. They are made up of two parts, a large part for fats, a small part for the milk-water phase. The device gives the opportunity of measuring capacity, the required quantity of products in the desired order. To do this, the head unit (2-7) is fitted with detectors for the scales. Their number is equal to the number of components in the recipe.

When the scale is switched on, its pointer enters the sensor and electro-impulse is transmitted to the pneumatic recipient. At this time the compressed air opens the pipe through the valve. As a result, the first component flows to the scales. Meanwhile, the scale arrow (1) will move to the second sensor. An electrically operated device re - connects automatic, suitable valves. At the same time, the valve for first component closes and opens the valve for the second component to leakage and so on. When the component is being removed from scale, the arrow is reversed. When the scales are completely empty, the scale should indicate the state of "0".

Dosing pumps with multiple diameter piston cylinders are used for volume distribution. There is a general engine. The volume of fluid is controlled by a special device, that is, which is changes the piston movement.

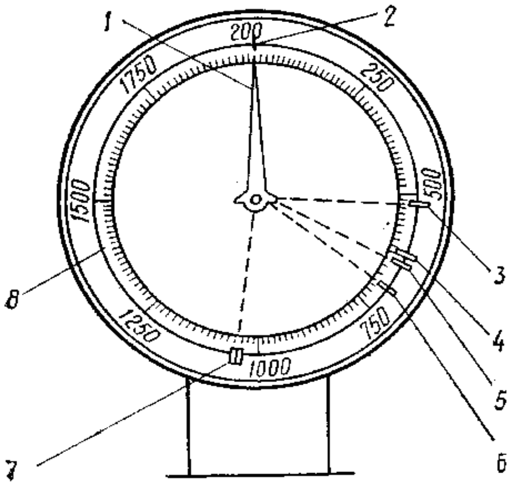

Figure 27. The diagram of the head part of the weighted dial scales

Mixing. The fatty base and water-milk phase are prepared separately and dosed. So they should be mix well. In production, milk is added at 15-20 ^{0}C, oils are at a temperature that 4-5 ^{0}C higher than melting temperature, added. During mixing, the temperature is raised to 38-40^{0}C and rough emulsion is formed.

The vertical cylinder mixer (Figure 28) consists of the body (10), the base (1) and the outlet pipe (12). The lid (5) has a reducer (6) and an electric motor (7) and is fastened to the ram. There are choker(shtutser) (8) for product access. The cylinder consists of a screw mixer (2) having a rotation speed of 60 rot/m. The cylinder is parallel to the screw (9) so that it does not allow the mixture to spin. Mixer is supplied with steam shirt (3). The water is poured through the tube (4) from the shirt and controlled by the level meter (11). This type of mixer is used in the continuous line of margarine production.

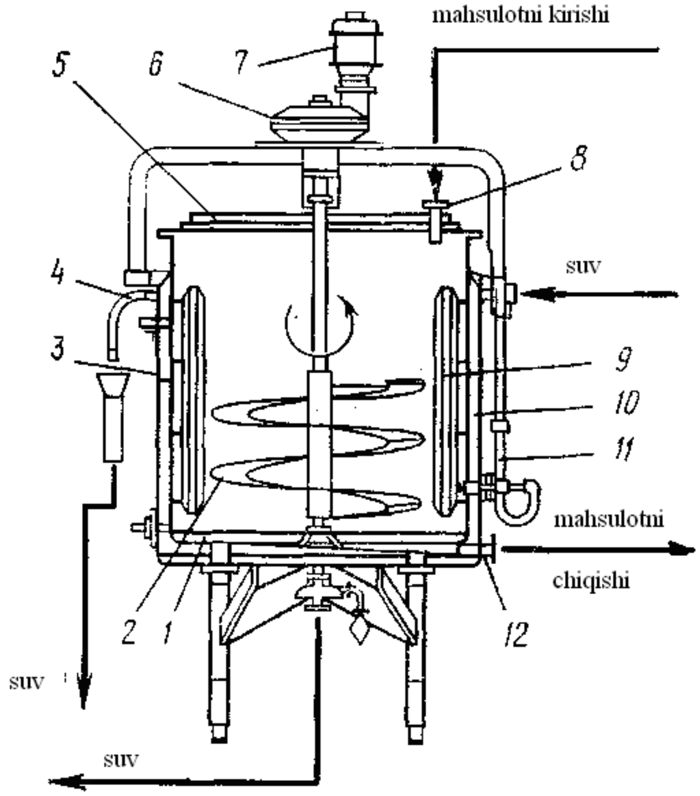

Figure 28. Diagram of vertical cylinderic mixer.

Emulsification. To make small-particle emulsions from the mixture, homogenizers are used. They are high-pressure pumps with horizontal three-pole. The main element of them is a homogenizer part. When the rough emulsion arrives to the pumping station, it is squeezed out of the hole (the width of the hole is 100 micrometer) and the valve. At this time a high dispersive emulsion is formed. The high pressure produced by the pump is used to eliminate the resistance of the tubes, by emulsion, from supercooler to the packaging machine. The capacity of the pump is 1670-3700 l / hour, the working pressure is 2.2-2.5 MPa. The high pressure pump works with fulled liquid and uses a special device to provide permanent surface.

The types of crystalline structures are determined in the form of α ;β: β - α is a low soluble and non-stable, β-medium, β-constant and melting in a high-temperature, crystalline. The formation of crystalline structures depends on the rate of cooling and mixing, the amount of saturated and unsaturated glycerides. When cooled slowly, large crystals (β) are formed. They give the margarine the properties of roughness, brittle and crushability.

Instant cooling and stirring can create unstable crystals (α-form). Their melting temperature is low too. They can be quickly transferred to β - form. That is why, in the modern margarine production plants, super-cooling is combined with mixing. As a result, fast melting, flexible and good consistency, margarines are produced. It is used coolers with 3 and 4 cylinders, for cooling. Crystallizers are installed to obtain, crystal structure, uniform and soft consistency product.

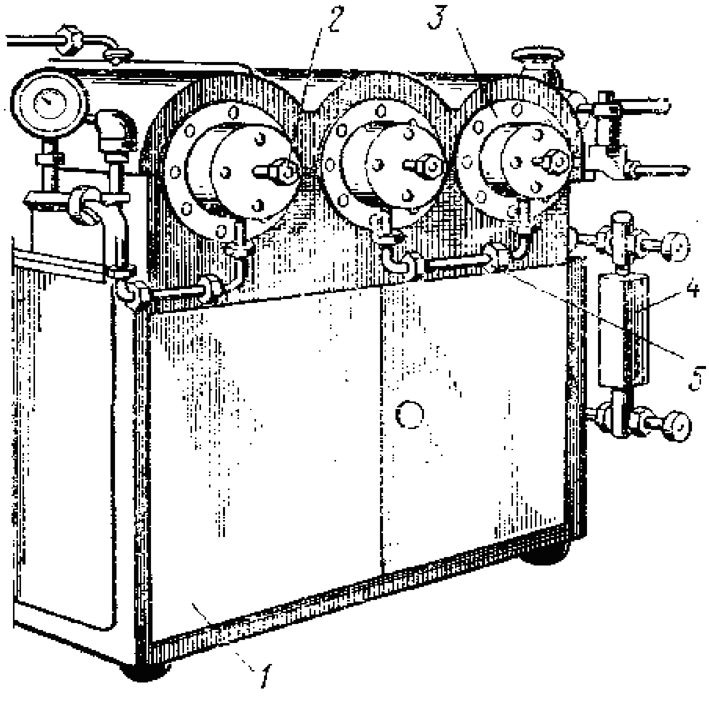

Figure 29. Diagram of three-cylinderic extreme-cooler

The three-cylinderic supercooler (Figure 29) consists of three similar heat exchanger cylinders that run in succession(ketma-ketlikda ishlaydi). It has the following basic components: (1) stanina, cooling (3) cylinder block, pipe for emulsion (5), pipe for hot water (2) and cooling system with ammonia (4).

The cylinders are mounted on the stanina(Fig. 8.4), each of them consist of insulated (8) “tube in tube” type heat exchanger apparatus (4). The first inner tube (2) is a working camera and hollow val (5) is mounted in it. Warm water with a temperature of about 50^{0}C is given to inside of val. Val (5) is fitted with 12 knifes, opposite each other, along its entire length.

Uchinchi silindrdan chiqayotgan sovutilgan margarin emulsiyasining harorati 12÷13^{0}C bo‘ladi. Uchsilindrli o‘tasovutkichining ishlab chiqarish quvvati 2,5-2,8 t/soat

The blades are moving and can move horizontally and vertically. The valve is rotated at 500 rot/m. Between the first (2) and the second (6) tubes, there is evaporation chamber, which is provided with a gutter (tarnov) (3) for cooling agent (ammonia). As the ammonia evaporates, the margarine emulsion cools down and crystallizes on the inner surface of the tube (2). The resulting crystals are separated from the wall by a knife (7).

The cooled margarine emulsion that comes out of the third cylinder is in a temperature 12 ÷ 13^{0}C. The production capacity of the three-cylinderic supercooler is 2.5-2.8 t / h.

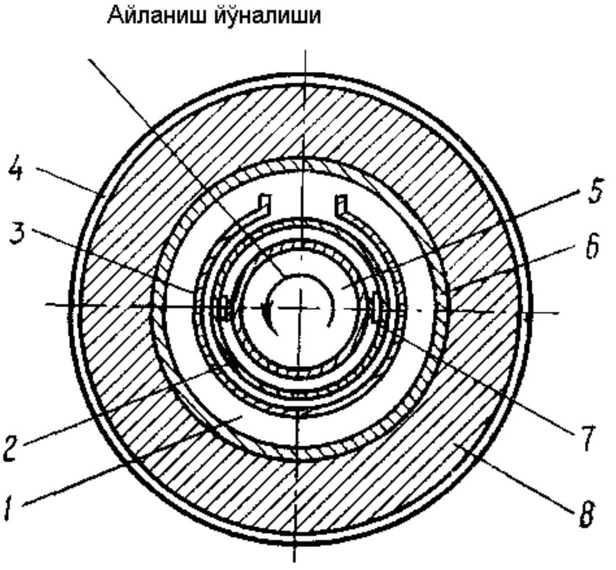

Figure 30. Diagram of the cylinder of the supercooler

Test questions

1. The parameters of margarine production technology.
2. Methods of production of margarine.
3. Stages of margarine production
4. Technological scheme of continuous margarine production
5. Dosing methods
6. Mixing, emulsification processes
7. Extreme cooling process

1 – LECTURE
EQUIPMENT FOR THE PREPARATION OF MARGARINE AND MAYONNAISE

Plan: Tanks and cooling baths. Pasteurizers. Equipment for dosing margarine. Equipment for emulsification and homogenization. Mixer. Emulsifier. Homogenizer. Ammonia Votator refrigerant. Crystallizer. Basic information about equipment for the production of mayonnaise.

Technological scheme of margarine production on line A1-JLU (Figure 31). Refined and dehydrated oils and fat-soluble substances are transported to the autoscales(1), on recipe, and the water-milk phase come to autoscales (2), then the oils and the water-milk phase are dispensed to the mixer (3). The emulsion comes alternate (navbatma navbat) from the mixer at 38-40^{0}C temperature to equilibrium container (4). There is saved the specified level. Then the emulsion is pumped into the cooler (6) at a pressure of 1.8-2.2 MPa and at 38-40^{0}C, with high pressure (5) pumps.

The cooled emulsion to 12-14^{0}C comes to distributing device (7), it is separated into two flows and passed through the filter (8), distributed to the crystalliser (9), then sent to the packaging vending machine (10). The excess margarine is fed into the container by means of a special device (15). Then, it is (16) pumped to the mixer (3), after melting it. After the packaging vending machine(10), it is passed through the margarine transporter to the automatic order machine (11).

The filled boxes are transported by the rolling stock to the wrapper (14) and then dispatched to the warehouse.

When producing the margarine in the monolith, after cooling, the emulsion passes through the dispenser, and come into the decrystallizer (12) from filter (8). Here, the temperature of margarine rises to 2-3^{0}C, as a result of internal heat dissipation.

The margarine (12) is supplied to the machine of automatic filling and weighing of boxes (13) from the decrystallizer. The boxes with a weight of 10,15,20 kg are transported through the carrier (14) to the wrapping machine and then to the warehouse.

Capasity of the most automated lines, which are run continuously is 2.5 t / hour. Some plants have high-performance lines with a capacity of 5 t / h. There are 4-cylinder coolers and normalization is carried out by measuring pumps with volume method. There are three mixers installed on these lines.

Monolith (quyma) margarine production. Dessert monolith margarines contain a large amount of liquid vegetable oils. Monolith margarines contain 82% and 60% fat. These margarines are designed for the prevention and treatment of the disease. They are manufactured in polymer containers (glasses and jars).

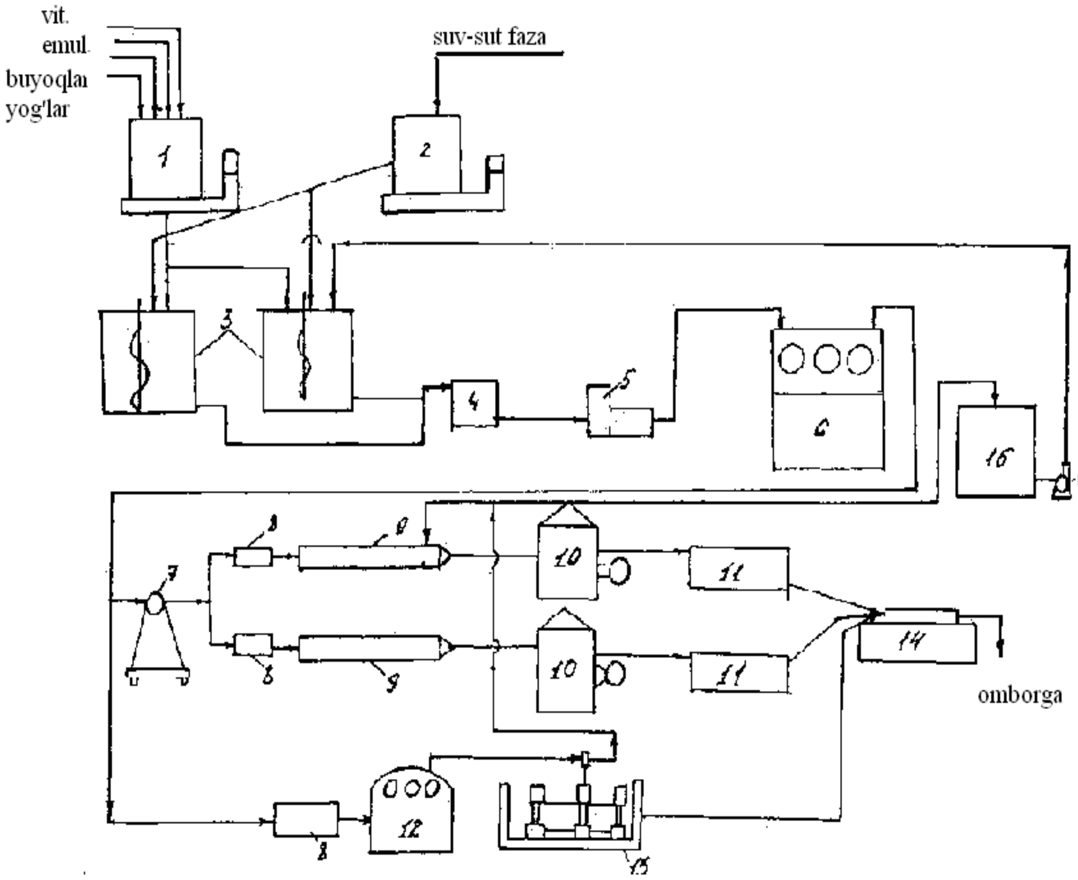

Figure 31. Technological scheme of margarine production on line A1-JLU

Monolith margarine production process is similar to the above mentioned process. The difference is that after the refrigerator, the margarine is sent to the decrystallizer for mechanical processing, and then packed.

Liquid margarine production. Liquid margarine is used in bread baking industry and it is produced according to the following recipe.

Components	Quantity in%
Salomas T_{melt} = 35-36 ^{0}C, The hardness should not be less than 350 g / cm.	10
Liquid vegetable oils	72,0
Emulsifier	0.8
Phosphate concentrate	0.5
Water	16.7
Total	100%

Preparation of liquid margarine is as follows. The normalized components (oil, emulsifier, phosphatide concentrate) are added to the mixer, heated to 45-56^{0}C, then the water is added to the mixer, stirred for 10-15 minutes and cooled to 28-32^{0}C. The emulsion is cooled to 10-12 ^{0}C in the TOM-2M cooler or in the "Votator" cooler.

The cooled emulsion is pumped into the mixer –normalizer by pump-emulsifier. As a result of breaking crystal structures down, there is occur fluent system. The finished margarine is poured into the tank car (avtotsisterna).

Confectionery, cooking and baking oils production.

These oils do not contain water-milk phases. They are a mixture of vegetable oils, salomas, pereeterizated and hydropereeterizated oils, and animal fat. According to the intended purpose the following additives are added: emulsifiers, dyes, vitamins and aromatizers.

Because of the lack of the process of water-milk phases, the technology of producing these fatty acids is easy.

It is used extreme cooling method to produce ready product which are in a smal size or packaged in a small containers, in the manufacture. The Johnson line and the A1 JLP with a capacity of 2-2.5 t / h are used in the production of small packaged (200-250 g) margarine.

When the product is manufactured in a monolithic mass of 10,15 and 20 kg, the initial cooler is set after the level keeper tank, before extreme cooler, to reduce the temperature of the fatty mixes. The cooler has a cylindrical body and has coil-pipe with 30-pin wrap around the interior.

The oil flows through the inside of the coil-pipe, cooled down by the water which are given inside the cooler. The temperature of the mixture decreases to 3-5 ^{0}C. After the extreme cooler, the decrystalizer is placed on the diagram.

The A1 - JLK, A1 - JLU (universal) packaging lines in the boxes, with a capacity of 2-2.5 t / h are used in the industry.

In some plants, three-cylinderic TOM-2M apparatus is used as a extreme-cooler.

Only new cardboard boxes are used to package. Each packed product label displays the necessary information.

Storage and transportation of margarine products. Margarine products could be damaged, if stored for a long time, or in a transportation.

Butter, confectionery and baking oils do not spoil more quickly than margarine. However, oxygen of air may oxidize it, resulting in accumulation of perix compounds, free fatty acids.

The reason for the degradation of margarine quality is that, the water-milk phase is mold and damaged by other microorganisms. When the warehouses are high in moisture, the molding process is fast.

The margarine, prepared from milk, which is fermentated with well-selected yeasts, is stored long. This technological modes of preparation, the fat content, and the density of packaging materials affect to this indicator.

Margarine products quickly absorb foreign odours, so they should be stored in a separate, in the room without the other products.

Storage temperature of margarines should not exceed 0^{0}C, air moisture should not be higher than 80%.

The temperature of margarine product, which is distributed to the warehouse, should not exceed 10^{0}C.

Evaluating the quality of margarine. The quality of margarine products is assessed by the state standard, industry standard and organoleptic and physicochemical parameters.

Evaluation of margarine quality. One of the requirements for the quality of margarine products is that it should have no smell and odour, should have butter-like smell and taste.

Margarine consistency should be quickly melting, plastic, dense, shimmering when cut, and appearance should be dry. The color of the painted margarine is light yellow, on the whole mass, and the color of the chocolate margarine is from light brown to dark brown. Margarine pills should not be crushed, their labels should be clear..

Deterioration of taste and odour. If nonfermentated milk is added and odour, taste ingredients are not added, the margarine would be odourless and with unclear taste.

In the case of usage of nonfermentated milk, bad aromatizers, and badly deodorized butter, the tasteless margarine is produced. The bad salt and burn smell of milk gives the product a bitter taste. When used milk with high acidity, the margarine is sour.

If cattle or sheep oil is added to the margarine, that comes animal fat taste. When used spoiled milk, margarine comes in a taste, cheese and cottage cheese. If the product has been stored for a long time in a metal container, it may cause metal taste. When used oil with soap residue, the margarine would be with alcali taste.

Defects on margarine consistency. If the margarine is soft, hard, cracked, this indicates that the fat recipe in the margarine is improperly structured or has a fat content with high hardness.

If cooling mode is misdiagnosed, if done excessive mechanical process to margarine, if the crystals of margarine very crumb(ushoq), these cause breaking margarine consistency. The appearance of fuzzy drops indicates the use of nonfermentated or bad fermentated milk. If the amount of emulsifier is low or it is in a poor quality, large drops of milk are formed.

Defects on packaging and in color. Unless the emulsion is cooled down gradually, the margarine surface does not have a marble appearance, it becomes striped and spotty. If the colorant in a poor quality or not enough, the color of the margarine is light. If finished color is gray, this indicates that the oil is not well-refined. If in the container occurs moisture during margarine storage, this indicates that the stability of margarine emulsion is insufficient. The physical and chemical parameters of the margarine determine its nutritional value. In the state industry standards, the amount of fat, humidity and volatility, melting point, acidicity are strictly limited.

The amount of fat in the margarine determine its energy value, the nutritional value of the product, and it changes according to the purpose of usage.

The amount of water in the margarine is taken into account along with the total amount of water included in the milk content and solutions of sugar and salt.

According to the state standard, most types of products should have 17% of moisture content, and not more than 24% for low calorie margarines.

The margarine-derived oil should have a melting point from 27^0C to 32^0C and margarine acidity from 2 to 2.5 Kettstorfer.

Evaluating the quality of confectionery, cooking and baking oils

The taste and smell of the product depends on its type and recipe. If the fat is prepared by addition of the phosphatide concentrate, the phosphatide taste is present. Fats for biscuits, chocolate products, cakes should not have strange taste and should be odourless, as well as should present the smell of added odour.

The color should be the same color as the whole mass, from white to yellow.

The amount of moisture and volatile substances in the oil should not exceed 0.3%; acidity from 0.4 to 1 mg of KOH; melting temperature should be 26-30 ^{0}C when used in waffle production.

Test questions

1. How to make margarine recipe
2. What are the main raw materials of margarine production?
3. Describe the technological modes of margarine production technology.
4. Explain the production methods of margarine.
5. What do you know about monolith margarine production?
6. What do you know about the production of liquid margarine?
7. Speak about cooking oil production.

2 – LECTURE
MAYONNAISE PRODUCTION TECHNOLOGY

Plan: Application, recipe and assortment of mayonnaise. Raw materials and consumables. Technological parameters of the process. General scheme for the production of mayonnaise, batch and continuous methods of production of mayonnaise.

Key words and phrases

Egg powder; Letsetin; Vegetable oil; Dried milk; Sugar; Salt; The powder of the mustard(gorchitsa); Nutritional soda; Components; Mayonnaise mass; Black pepper.

Mayonnaise is an O-W emulsion which is a nutritional product, comprising vegetable oil, dry milk, egg powder, sugar, salt and other nutritional and flavoring ingredients. It is used as a supplement to increase the nutritional value of food, to enhance appetite, and to improve digestion.

Mayonnaise is product with a high biological value. It includes:

1) vegetable oils (sunflower, cotton, soybean oil). These oils are not only the source of calorie, but also they are the source of essential acids (olein, linol). These acids help reduce the amount of cholesterol in the blood;

2) egg powder is a source of proteins and it is also a source for liver functioning.

Raw materials and components. The main component of mayonnaise is **refined vegetable oil**. Salomas can not be used, because it breaks the emulsion. **Dried milk** or **egg powder** is used as an emulsifier. Dry milk forms structure, proteins soak in the water, helps to hold moisture.

Mustard powder is added as an addition to the taste of mayonnaise . The proteins, which is contained in it, provide emulsification.

Salt and **sugar** is used as an additive of taste.

Nutrient sodium ($NaHCO_3$)maintains a precise pH, which improves soaking the proteins of the milk.

Acetic acid is an addition to the taste enhancer, increases the bactericidal properties of mayonnaise.

Water is used to dissolve salt and sugar, as well as to dissolve and soak proteins.

The requirements of the quality for liquid vegetable oils, sugar, milk, salt, in the production of margarine , are the same with requirements of the mayonnaise production.

Egg powder should not have foreign odour and taste. The mustard powder should be dry and have sharp odour of allyl oil

Assortment and recipe. Mayonnaises are divided into groups of kitchen, diet and children, which are added seasoning and taste additives:

-The kitchen mayonnaises («Provansal», «Milk», «Lyubitelskiy») have a subtle taste, good viscosity and consistency.

- The mayonnaises with seasoning additives ("Bakhor" with dill, "With mustard" and others), which looks like "Provansal" mayonnaise in taste, but there is noticeable taste and smell of the added healing spice. These mayonnaises are used to enhance the taste of salads, and the dishes with vegetable, fish, and meat.

The mayonnaises, which are seasonings, spices and instant-looking additives are subdivided into groups with bitter, and sweet taste.

The mayonnaises with bitter taste includes "Gorchichniy", "Prazdnichniy", "Ogonyok" and others, the mayonnaises with sweet taste "Apelsinli", "Asalli" and others. These mayonnaises have the sweet taste of the essence, which is added in it.

They contain phosphorus-starch, which is used as a live ingredient, and they are used to enhance the taste of salads with fruit and others . They are also used in a baby diet and as a sandwich products.

For "Diabetic" mayonnaise, it is used xylite instead of sugar. These mayonnaises have sweet taste.

The recipe for some mayonnaises is shown in Table 17.

Table 17

Mayonnaise recipe

Components	types of the mayonnaise		
	provansal	bakhor	with mustard
vegetable oil	65,4	65,6	35,0
egg powder	5,0	5,0	6,0
dry milk	1,6	1,6	2,5
sugar	1,5	1,5	3,0
salt	1,2	1,3	2,0
soda	0,05	0,05	0,05
mustard powder	0,75	0,75	1,2
80% acetic acid	0,65	0,75	1,1
black pepper	-	0,175	-
pepper	-	0,05	-
water	23,85	23,2	49,15
total	100 %	100 %	100 %

The technology of mayonnaise production

Periodic method.

The periodic method consists of the following steps:

- preparation of components

- preparation of the paste
- preparation of "rough" emulsion
- preparation of tiny dispersed emulsion
- adding aromatic and flavoring additives.

Preparation of the components. Scattering components: dry milk, sugar, egg powder, mustard powder and salt are sieved in the vibro-sieves with cage-size dimensions of 1-3 mm.

Acetic acid saline solution is prepared in special container. There is given a clear salt solution with a first concentration of 13-15%, then added acetic acid with concentration of 80% . The concentration of the solution should be 7-9%.

Preparation of the mayonnaise paste. It is poured the water with 90-100 °C temperature, into the one of the mixers, and the mustard powder is inserted. Mustard powder: water ratio, should be 1: (2-2,5). They are mixed until the homogeneous matter is formed.

Then, it is added water with 35-40^{0}C temperature, dry milk, soda and sugar. Dry milk: water ratio, should be 1: 3. Then, the mixer is operated, its cover is supplied with steam. For better dissolving of the components, the temperature is raised up to 90-95^{0}C, and maintained at this temperature for 20-25 minutes. Then the mixture is cooled to 40-45^{0}C.

It is inserted egg powder, and water with 40-45^{0}C temperature to the second mixer. Their ratio should be 1: 2. The mixture is stirred and heated up to 60-65^{0}C and held for 20-25 minutes. Then cooled to 30-40^{0}C.

The technological scheme of mayonnaise production (Figure 32). Soda, mustard powder, dried milk and sugar are added to the mixer(11). The mass is mixed, heated up to 90-95 ^{0}C, and hold for 20-25 minutes until dry milk completely dissolve. The egg powder and water with 40-45^{0}C temperature, is inserted to the mixer(1), the mixture, which is in the mixer(11) is cooled to 40-45 ^{0}C, then egg powder solution, from the mixer(1), is pumped through the pump-emulsifier (2), then the solution is thoroughly mixed until the begin of forming a homogeneous mayonnaise paste.

The readiness of the paste is determined by watching, the sample, which is taken to the wooden plate, it should be homogeneous and should flow straightly from the plate. The paste is cooled to 30-40 °C, and pumped by pumping-emulsifier(2) into a large (3) mixer. There is given a vegetable oil, and vinegar - saline solution from the tank (12). In order to form a tiny dispersed emulsion, the mayonnaise mass should be passed through homogenizer(4) and sent to the container(5) for the ready mayonnaise. The mayonnaise, from the tank (5), is sent to the packaging. It is transferred to the automatic filler (6), to the closing machine (7), to the automatic labeling machine (8) and to the warehouse, through the automatic parcel post(9). Mayonnaise is stored at 3-18^{0}C.

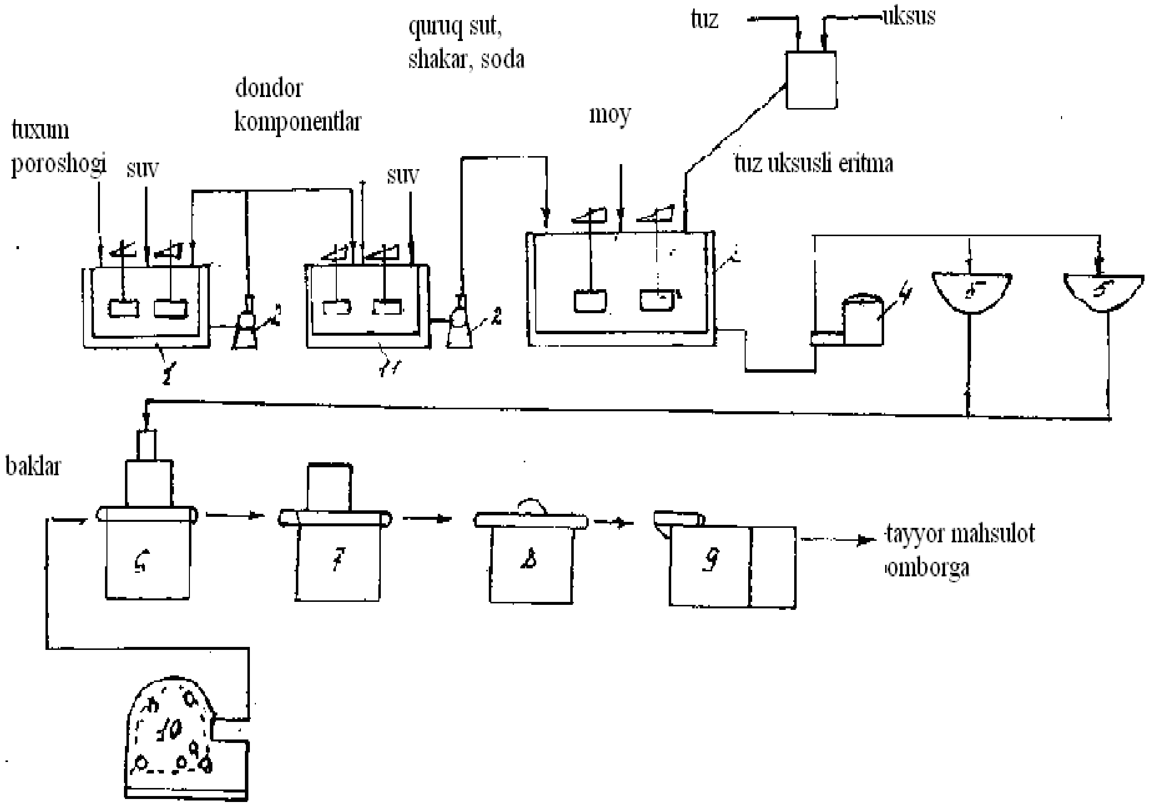

Figure 32. Technological scheme of mayonnaise production

Sanitary and hygienic conditions at the margarine and mayonnaise plants. Production of resistant and high-quality margarine and mayonnaise products depends on compliance with sanitary and hygienic regulations in the plant.

Sanitary condition of the building. Production plants should have much natural lighting; the building should be provided with a window frame for adequate ventilation, and should be blocked by a net to protect from the main microbial carriers - from flies, in the summer.

The milk section is subjected to serious requirements, it should be separated from other parts and it is not allowed to enter the strangeres in it.

The walls are covered with a tile of at least 2m height or painted with grease paint, and washed at least once a week. The floors of all buildings are covered with waterproof ceramic tiles and sewn into the direction of sewerage and washed several times a day. When molds appear on the wall and ceiling, it is treated with special antiseptic agents before whitening it. Doors and handles of industrial buildings should be washed daily in hot soapy water. Input and output doors should be separate, as there should not be direct connection between production and household premises.

The main cause of spoilage of products in the refrigerated warehouses is microflores, so special measures should be taken to ensure high sanitary and hygienic conditions. Warehouses are disinfected periodically, after being empty from the product.

Sanitary condition of the equipments. The quality of the product, to be produced, depends largely, on the sanitation condition of the equipment. In order to ensure the bacterial cleanliness of the equipment, it should be washed immediately after the work is stopped. First of all, it should be removed residue of fat , milk, sugar syrup, margarine emulsion or margarine. Washing of the equipment is carried out with the help of the cycle of wash solution in the closed cycle.

Personal hygiene of employee. Everyone who comes to work at the Margarine Plant is undergoing a medical examination, and then every three months a medical examination is carried out. Everyone working at the Margarine Plant fulfills medical technical requirements. The results of medical examination and medical technical requirements are recorded in his Sanitary Book.

Prospective directions of margarine production development. In addition to the production of automatic lines and high-strength devices, as well as high efficiency packaging machines and packaging of products, it is expected to use the method of extrusion into polymeric materials.

It is envisaged to increase the quality of margarine by increasing the range of margarine production in targeted directions.

Margarine products are produced in the following assortments: market needs, general catering system and production,

- For food needs - margarine butter, diet margarines.

Oils for culinary purposes in the household and public catering system and kitchen margarines.

- Specific margarines and fats that meet the requirements for composition and technological quality for the production of bread and confectionery products.

Recipe is made up on a high quality nutrition of products, consumers and technology.

In the margarine will increase the amount of liquid vegetable oils and produce dietary margarine products, for children and adolescents with low-fat.

Test questions

1. What is mayonnaise?
2. Describe the raw materials and components.
3. How to make a recipe for mayonnaise.
4. Describe the technological modes of making the mayonnaise paste.
5. Briefly explain the technology of mayonnaise production.

4-MODULE. FATTY ACID AND GLYCERIN PRODUCTION TECHNOLOGIES

3 – LECTURE
HYDROLYSIS OF FATS

Plan: The necessity and importance of the decomposition of fats and oils. Theoretical foundations and principles of the hydrolysis process. Factors affecting the hydrolysis process. Technological scheme of oil hydrolysis in batch autoclaves. The device and operation of the autoclave. Methods for water purification with glycerin. Technological scheme for the purification of glycerin water.

Key words and phrases

Hydrolysis; Glyceride; Speed; Fatty acid; Hydrolysis ratio; Temperature; Geterogen system; Glycerin; The level of deficiency; Petrov contact

In 1779, the German scientist Sheele took a glycerin as a result of the saponification of olive oil in attendance with lead oxide. That is why glycerine is called "Sheel's sweet oil". In 1823, French scientist Shevrol called him Glycerine. The formula of the glycerine was found in 1836 by Peluz. Industrial production of glycerin began to develop in the mid-nineteenth century after nitroglycerine was obtained.

As a result of the growth of some industries (plastic, special varnishes, dyes, mono and digliceride, perfumery-cosmetics and pharmaceutical products), the demand of the national economy to glycerine, has grown year by year.

In the cosmetics industry, glycerin is used to enhance, the quality of creams (human face cream, creams for use in hands) and lip paints as well as a supplement to perfumery product. In addition, glycerine is a fabric for the manufacture of fabrics, special paper production, rubber, car and clock oils, glue and gelatin production, photography production and widely used in other industries.

Fatty acids are widely used in the production of various types of soaps, high molecular weight fatty alcohols, aliphatic amines, as a plasticizer for the production of rubber products, as a lubricant in the production of silk, wool and cotton. Fatty acids are widely used in the production of technical oleins and technical stearic acids to meet the needs of chemicals, rubber machinery, light industry.

Glycerine and fatty acids in our country are mainly derived from oils by hydrolysis.

There are two main ways to process fat, to get glycerin and fatty acids:

1. Non-reactive partition of fats in the obtaining glycerine water and fatty acids. To obtain raw glycerine, the glycerine concentrate, which is purified from compounds, is concentrated. To produce high quality varieties of glycerin and fatty acids, raw glycerin and crude fatty acids are distilled.

2. By saponification of fat with alkaline, to get soap and undersoap alkaline as well as to separate glycerin from the undersoap alkaline

In our Republic, glycerine and fatty acids are obtained by non-reactive hydrolysis of fat. In this method, it is better to obtain more glycerine and fatty acids in a high quality, than obtaining glycerine by saponifying the fat. In addition, in soap cooking process from free fatty acids, it is used the sodium carbonate, which is cheaper than sodium hydroxide.

Hydrolysis of fat (saponification) is a chemical process, based on the effects of three glycerides with water. There is formed glycerin and fatty acids.

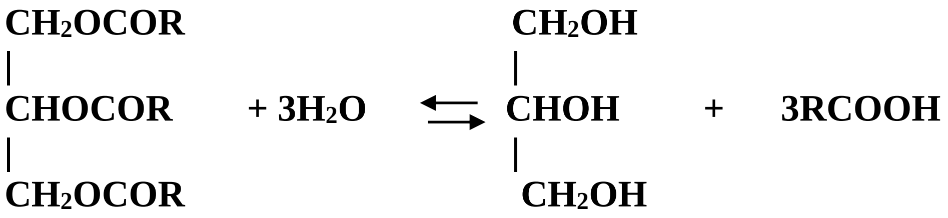

$$\begin{array}{l} CH_2OCOR \\ | \\ CHOCOR \\ | \\ CH_2OCOR \end{array} + 3H_2O \rightleftarrows \begin{array}{l} CH_2OH \\ | \\ CHOH \\ | \\ CH_2OH \end{array} + 3RCOOH$$

Gidroliz yoki sovunlanish texnikada yog‘ning parchalanishi deyiladi. Gidroliz bosqichli jarayon bo‘lib, mono va di glitseridlarni hosil bo‘lishi bilan boradi Hydrolysis or saponification are referred to as fat partition in techniques. Hydrolysis is a step-by-step process, with the formation of mono and diglycerides.

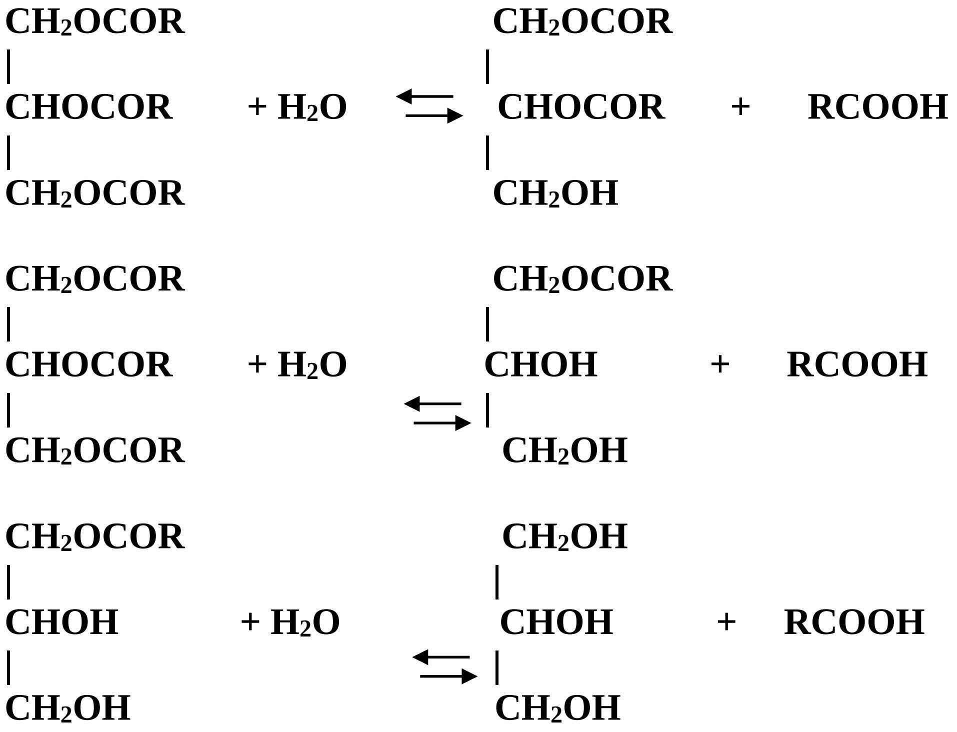

$$\begin{array}{l} CH_2OCOR \\ | \\ CHOCOR \\ | \\ CH_2OCOR \end{array} + H_2O \rightleftarrows \begin{array}{l} CH_2OCOR \\ | \\ CHOCOR \\ | \\ CH_2OH \end{array} + RCOOH$$

$$\begin{array}{l} CH_2OCOR \\ | \\ CHOCOR \\ | \\ CH_2OCOR \end{array} + H_2O \rightleftarrows \begin{array}{l} CH_2OCOR \\ | \\ CHOH \\ | \\ CH_2OH \end{array} + RCOOH$$

$$\begin{array}{l} CH_2OCOR \\ | \\ CHOH \\ | \\ CH_2OH \end{array} + H_2O \rightleftarrows \begin{array}{l} CH_2OH \\ | \\ CHOH \\ | \\ CH_2OH \end{array} + RCOOH$$

The change in the content of triglyceride, glycerine and fatty acids as a result of the hydrolysis of triglycerides is shown in Figure 10.1 below.

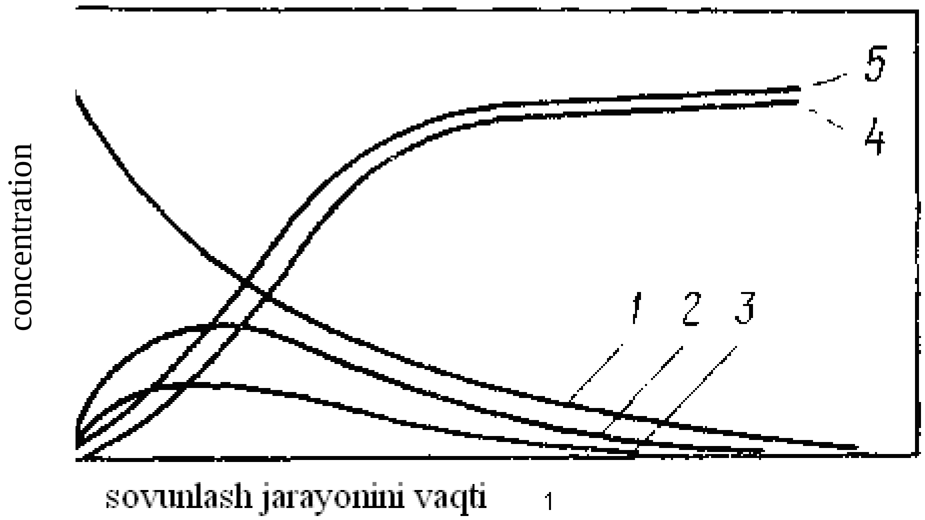

Figure 33. Change of glyceride, glycerin and fatty acids in the hydrolysis process:

1 - triglyceride; 2 - diglyceride; 3 - monoglyceride; 4 - glycerine; 5 - free acids.

As you can see from the picture, the amount of triglyceride in the process of hydrolysis slowly decreases. Mono and diglycerides are rapidly growing at the beginning of the process and then reduced. The amount of glycerol and free fatty acids increases rapidly at the beginning of the process, and then this increase is diminished.

There are glycerol in various fats from 9.7% to 13%. Theoretical output of glycerine is computed from the following formula, in %.

$$\mathbf{X = (S.s. - K.s.)\ 0{,}0547,}$$

where: 0.0547 – equivalent coefficient to the separation of 0,0547 glycerol, in the process of full saponification of neutral fat, in the usage of 1 mg KOH;

S.s.- saponification number of fatty acids, mg KOH;

K.s.- acidic number of fats, mg KOH

In practice, the output of glycerine is less than theoretical, which is explained by losses in the industry.

Hydrolysis speed is affected with different factors: nature of fat, temperature, catalyst.

The hydrolysis rate of the lower molecular fatty acids is higher than that of high molecular fatty acids, and the saturated fatty acids are faster hydrolyzed than unsaturated fatty acids. Hydrolysis of fat accelerates due to hydrogen ions and hydroxide ions, so the hydrolysis process is a catalytic process.

These ions are added to the fat-water system as acids and other substances (Petrov contact), or it is increased the concentration of H + and OH-ions in the system, to create condition of increasing the water dissociation level of water. It is not noticeable dissolution of water in fat and fatty acids at a temperature lower than 100^0C. At 150^0C, 3-6% of water is soluble in the fatty acids, and at 250^0C, 12-25% of water dissolves. With rise in temperature, the dissociation rate increases. If the ions of water at 25^0C are $1,04 * 10^{-14}$ mol / l, then in 200^0C it will reach up to $46* 10^{-14}$ mol / l. This allows the production of hydrolysis without catalysis.

Intermediate products, i.e. di-, monoglycerides also affect to hydrolysis rate. They are more polar than triglycerides and increase water solubility in fat. This explains the auto-catalytic character of hydrolysis, which can be seen in Figure 10.2 below.

Intermediate products, mono and di glycerides, influence to the speed of hydrolysis in the first moment of the reaction. These compounds are highly polar than triglycerides due to the hydroxide molecule content. This increases solubility of water in oil and increases the rate of hydrolysis. In addition, because of its surface activity, they form an oil and fat emulsion and accelerate the saponification reaction. In short, the production of mono and diglycerides increases the rate of hydrolysis. This indicates that the fatty acids have a autocatalytic character.

The kinetic character of the hydrolysis process of oils is reflected in the S-shaped curve, this is characteristic for autocatalytic process (Figure 10.2)

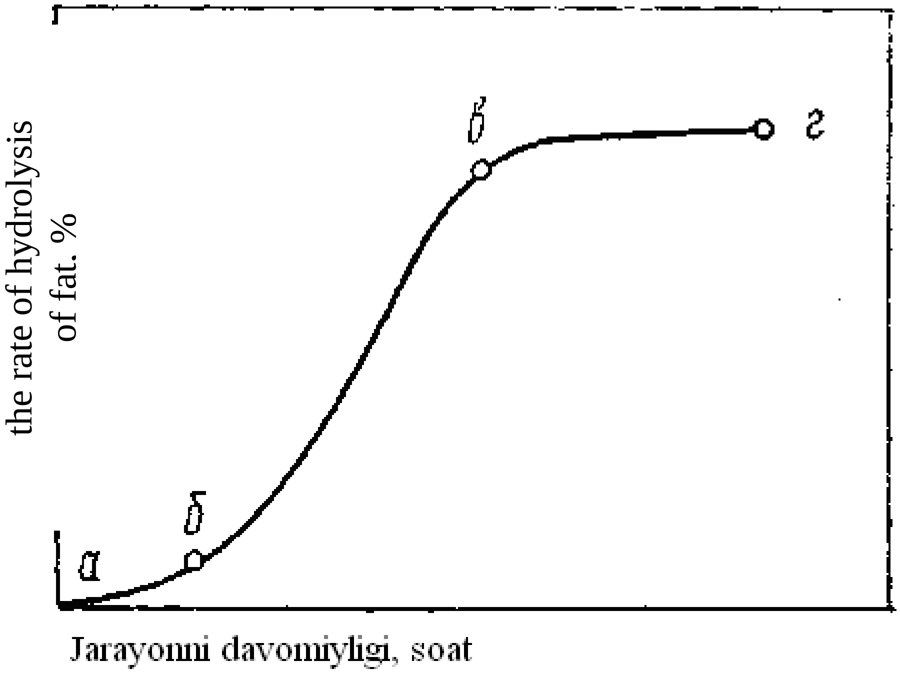

Figure 34. Hydrolysis reaction of the fat

Hydrolysis is a reverse process, simultaneously with the main reaction, a reverse reaction occurs, the esterification of glycerol and fatty acids. In the initial moment, the reaction rate is low, which is explained by low melting of water in the heterogeneous system (ab part of the line in the Figure 34). With the formation of mono and diglycerides in the system, the rate of reaction increases suddenly (bv curve). With increasing concentration of hydrolys products (glycerol and free fatty acids), the rate of the esterification reaction increases, while the saponification of glycerides, on the contrary, decreases. In the end, the equilibrium ratio of the right and reverse reactions, the system achieves chemical stability.

The state of equilibrium in the system is expressed in the *vg* curve, which is asymptotic close to the parallel line to the absciss axis.

Hydrolysis of the fat is characterized by the degree of hydrolysis at different stages of the reaction, ie the amount of fatty acids in the partitioned fat (%).

The decisive factor in the balance situation is the amount of water. Theoretical amount of water relative to the weight of fat is 6%. In practice, water is added more, because water supplies H + and OH-ions and it is a good glycerin solvent. How much lower the concentration of glycerol in the water, the more fat is hydrolyzed. Therefore, the hydrolys of oil in the industry is carried out in two stages. At this point, the hydrolysis process is stopped without waiting for the balance situation, glycerol water is poured, and the second phase is provided with pure water that does not contain glycerol. One of the products generated from the reaction, medium causes glycerol to move to the right, ie increasing the degree of hydrolysis, as shown in Figure 10.3. Usually water and oil for hydrolysis are taken at a ratio of 6:10.

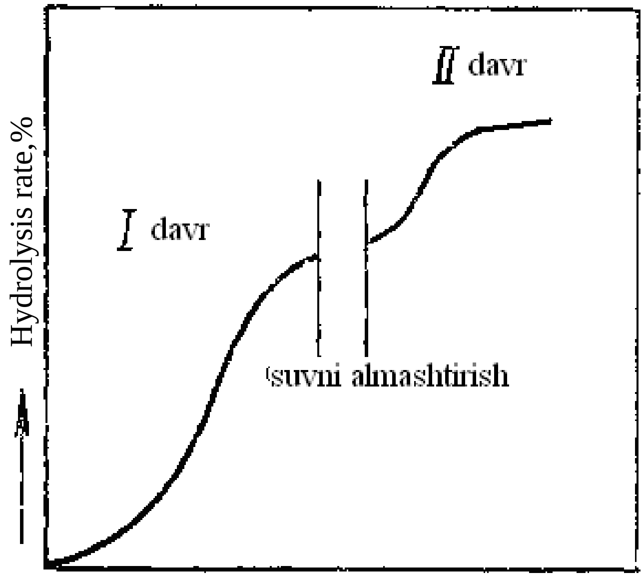

35 - picture. Hydrolysis reaction of fat, when worked in two stages

At present, the non-reactive method without the presence of a catalyst, at a temperature of 200 - 225^{0}C and under pressure 2 - 2.5 MPa (20 - 25kg / cm^2) is most promising. This method will ensure high quality and high amount of glycerol and fatty acids. Non-reactive hydrolysis of fats is performed periodically or continuously in autoclaves.

Technological scheme of hydrolysis of fat in autoclaves in periodic mode (Figure 36). The fat, from the tank(3) (where it is heated to 85-90°C) through the measurer (4)

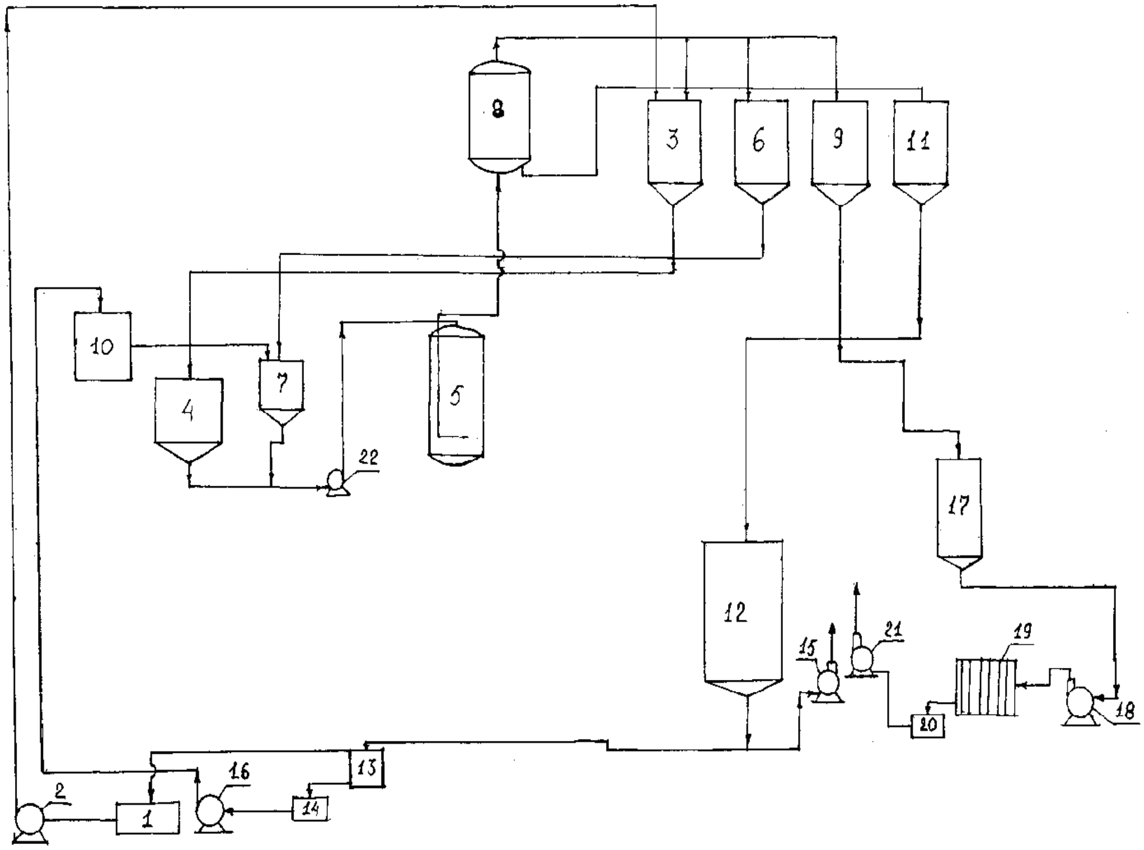

Figure 36. Technological scheme of hydrolysis of fat in autoclaves in periodic mode

in the amount of 4.5 t, by means of pump(25), is dispatched to the autoclave(5). Glycerine water with low concentration(5%) heats up to 95^0C in the tank(6) and sends in the amount of 1.6-1.7 ton to the autoclave. The pressure, in the autoclave, is at 20-25 atm and it is heated to $220\text{-}225^0$C. After boiling for 3 hours, the oil disintegrates to 85-87%. After that, the steam supply is stopped and the autoclave compound is kept for 15 minutes. Glycerol water, containing 15-16% glycerol, is poured into the pot (9) by means of a pressure reducer (8). The condensate, in the amount of 1.2 t from tank(10), is added to the fatty acids, and the second stage of the disintegration process begins, and it takes about 2 hours. After that, glycerol is dispatched to the tank, and fatty acids are to the tank (11).

Then the fatty acids are washed off with condensate (10% to the fatty acid weight) in the tank(12). Wash water is directed to the tank(14) through the oil holder(13). The fatty acids are pumped by means of pump(15) to subsequent treatment. There are 0.2-0.3% dissolved fatty acids in the glycerol water, so it is processed with lime. To do this, glycerol water from the tank(9) falls into the neutralizer (17), where it heats up to 85^0C. By mixing it is added with lime milk ($Ca(OH)_2$), with concentration 12-14% (up to weak alkaline reaction). After that, the glycerol water is pumped to the filter (19) with the pump(18). Filtered glycerine water is collected in the tank(20) and sent to the evaporation with the pump (21). Partially disintegrated oil, which is accumulated on the oil holder (13), is poured to the tank(1) and pushed to the tank(3) with pump(2), to disintegration. It is received oil to the tank(1) and is dispensed to the tank(3), with pump(2). The condensate, from the tank (14), is dispatched to the collecting tank (10), by means of pump(16).

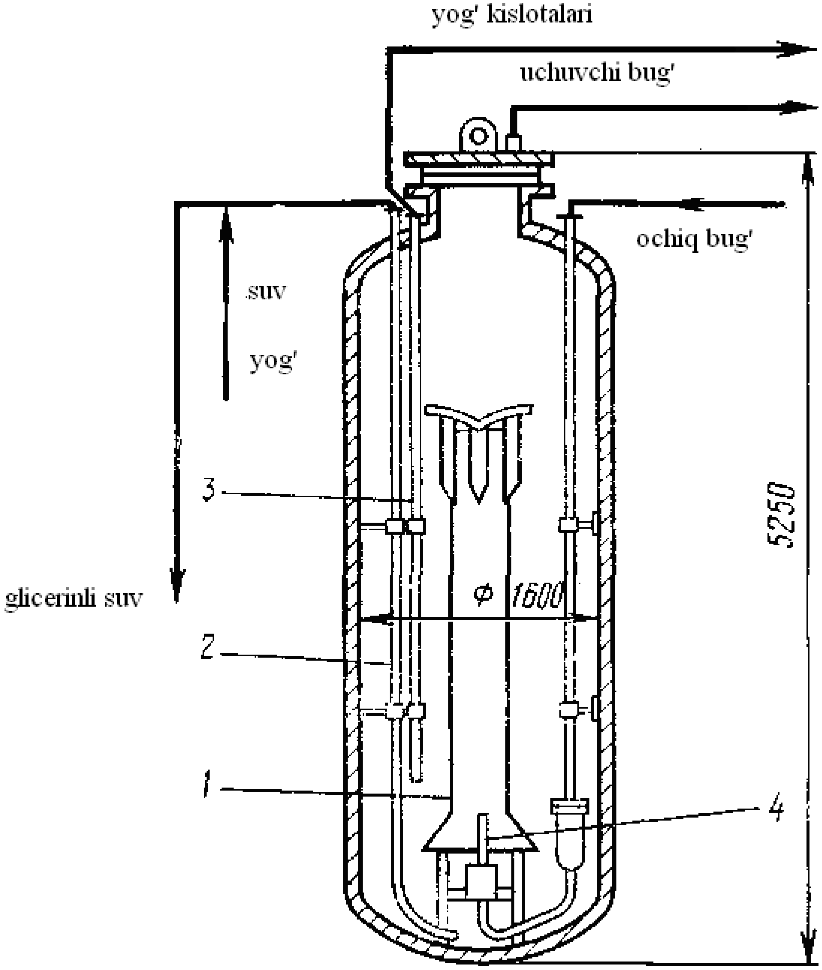

Figure 37. Hydrolysis autoclave

The autoclave (Figure 37) comprises a cylindrical part, a spherical base and a lid as well as it is mounted a circular tube (1) inside of it. The pipe (1) is supplied with a steam vapor, with pressure of up to 2.5 MPa through the sprayer (4). The oil and water are fed from the pipe (2) which extends into the autoclavic tubes. Because the pipe is lowered to the core, it ensures releasing of glycerol water after the first stage of hydrolysis. The pipe (3) serves to remove fatty acids after the second stage of hydrolysis.

On the spherical surface, there are shutters of pipes (2 and 3), as well as staples for the steam entrainment, which provide the necessary pressure for the steam release or acid release from autoclave, and sleeves for control measuring instruments. Autoclaves made of acid resistant steel with a capacity of 9.5 -20 m^3 are widely used in industry.

Purification of glycerol water. In the glycerine water, which is obtained from the non-reactive integration of fats, there are various types of organic and mineral compounds, besides glycerol and water. The amount of these compounds depends on the quality and types of the hydrolysis oil. Most of the compounds are lipids, in particular fatty acids, which account for 0.3-1.5% of glycerol water. Additionally, there are 0.05-0.1% amino compounds, including 0.02-0.04% amino acids, 0.04-0.08% carbon compounds, 0.004-0.008% carbohydrates, mineral salts, and others.

The majority of these substances have surface activity and it increase the stability of oil-water emulsion. This makes difficulty, in the processing of glycerol water.

Glycerol solution is cleaned from these compounds before concentrating.

This is

- Firstly, to get a clean glycerine that meets standard requirements
- Secondly, to ensure requirements of evaporating process fully (preventing of foaming from spraying in vacuum devices, reducing the generation of sediment in the heating pipes, etc.)
- third, to protect the apparatus from corrosion.

Purification methods of glycerol water. Glycerol water, obtained from non-reactive hydrolysis of fats, is a complex heterogeneous system containing different types of natural compounds, both in genuine and colloidal solutions, and in emulsion. Therefore, the separation of mixtures from such water requires a number of basic technological processes: the destruction of the colloidal system's stability; integration of the emulsion of lipids with glycerol water; remove the lipids as well as water-soluble ionogenic and nonionic compounds. There are several ways to clean glycerol water in order to carry out all these processes.

Defecation, boiling and cooling. The defecation is based on the difference in density of glycerol waters and fatty acids: fatty acids are separated first on the glycerol water and then separated by this or that methods. As a result of boiling glycerine water, the oil-water emulsion breaks down, fatty acids and neutral oils are separated, and then they are separated by defecation.

Cooling of glycerin water reduces the solubility of the compounds in it. As a result, crystallization and hard fatty acids are aggregated. The resulting substances can be separated by defecation or filtration.

Neutralization of glycerol with calcium hydroxide. This method is based on the following chemical reaction:

$$\mathbf{2RCOOH + Ca(OH)_2 \longrightarrow (RCOO)_2Ca\downarrow + 2H_2O}$$

The resulting soap absorbs on its surface, coloring matters (carotenoids, chlorophylls, etc.) and other accompanying substances.

For neutralizing, aqueous suspension of calcium hydroxide (lime milk) is used. The neutralization process is carried out at neutralizer at a temperature of 80°C using a steam, air or mechanical mixer. Alkali is added in the excessive amount than theoretical amount of alkaline. The excess amount of alkaline is found by means of titration: If 25 ml of glycerol is consumed with a solution of 0.01% of a 3-5 ml solution of hydrochloric acid, it means that the excess amount of calcium is 0.003-0.005% calcium oxide.

When the neutralization process is over, the product is defecated and calcium soap is separated. Glycerol water is mixed and filtered through filters.

The substrate is treated with Na_2CO_3 to convert calcium soap to sodium soap. The process is based on the following reaction:

$$\mathbf{(RCOO)_2Ca + Na_2CO_3 \longrightarrow 2RCOONa + Ca\,CO_3\downarrow}$$

Although the method is widely spread, it has a number of shortcomings. As is known, melting of calcium soap in glycerol is higher than that of fatty acids. This indicates that the method is not suitable.

The presence of calcium soap in the glycerol water causes to occur foam during distillation. In addition, alkaline water increases the alkalinity of glycerol water. As a result, when the glycerol solution is processed, the amount of ash and organic matter increases.

In addition to neutralization with calcium hydroxide, glycerol water may be purified by separation, by ion exchange, by processing with aluminum sulphate and acid.

Cleansing scheme of glycerol water. Because of the variety of accompanying substances and mixtures in the glycerol water, it is used combination of several cleaning methods in the technological scheme of its cleaning. They can be combined in the following order:

defecation-cooling-filtering;
defecation - separation;
defecation – separation - processing with lime milk - filtration; and so on.

The technological scheme for the purifying of glycerol water, which is commonly used in the industry, is shown in Figure 38.

According to the scheme, glycerol water is first comes to the tank (1) with the aim of defecation and cooling down to 70-80^{0}C. Glycerine water is pumped, with pump(2), from this unit to the separator ESV (3). The separated fatty acids and neutral oils are collected in the tank (15), and theyare given for re-hydrolysis with the separated lipids from tank (1).

Glycerine water which is degreased in the separator(3), first enters to the middle container (4), then goes into the neutralizer(6) via pump (5). Calcium hydroxide suspension is also supplied to the neutralizer from measurer(7) at the same time. Lime milk, which is prepared in the tank(14), is cleaned from the mechanical impurities with net filter, before transferring to the neutralizer, and then directed to the measurer (7), via pump(13).

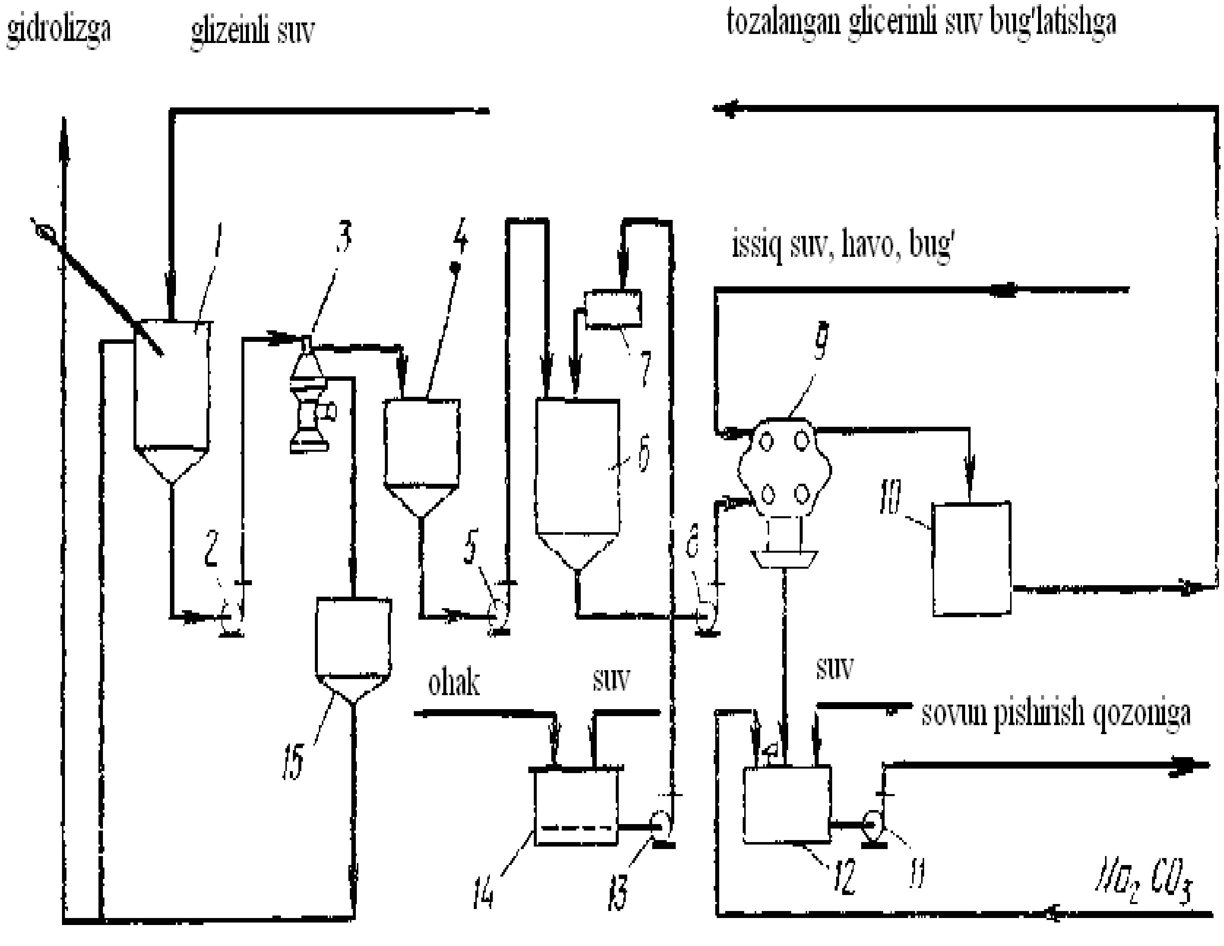

Figure 38. Technological scheme of purification of glycerin water

Glycerol water, which is neutralized in the neutralizer (6) is fed to the frame filter-press (9) using the pump (8) to separate the calcium soap from it.

The residual sediment (calcium soap) is washed with water and then blowed with steam, as well as it is deducted to the tank(12) from the filter-press. Here, it is processed with Na_2CO_3, to form sodium soap. The resulting suspension is pumped into the soap cookware with pump(11).

Glycerine water which is purifyed in the filtr-press is dispatched to the chamber(10) and then to the evaporation.

Test questions

1. The process of hydrolysis of fats.
2. Stages of hydrolysis.
3. Change in the content of glyceride, glycerol and fatty acids as a result of hydrolysis.
4. Hydrolysis - what is it?
5. Importance of hydrolysis
6. The effect of various factors on the hydrolysis rate
7. Melting of water in fatty acids
8. Hydrolysis rate
9. The amount of water during the hydrolysis process
10. Hydrolysis mechanism.

4- LECTURE

THE TYPES OF EQUIPMENT FOR THE DECOMPOSITION OF OILS AND FATS

Plan: Autoclave: purpose, scope, classification. Equipment for high-temperature oil separation. Technical characteristics (description) of autoclaves, reactors, reduction equipment. Equipment for the extraction of technical glycerin. Equipment for the distillation of glycerin. Distillation cube: functions, device, characteristics and a technical description.

5- LECTURE

TECHNOLOGY FOR THE EXTRACTION OF TECHNICAL GLYCERIN

Plan: Purification of glycerin water. Composition of glycerin water and the purpose of its pretreatment. Cleaning types: lime solution cleaning, aluminium sulfate cleaning, activated carbon cleaning, centrifugal cleaning, ion exchange cleaning. Glycerin water purification technology. Obtaining crude glycerin. The essence of the process. Extraction of glycerin from soap alkali.

Key words and phrases

Lead oxide; Olive oil; Nitroglycerine; Technical glycerine; Distilled glycerol; Distillation cube; Vapor heater; Vapor; Condenser

Obtaining technical glycerol. To get raw glycerol, in the concentration 86-88%, purified glycerine water is evaporated (concentrated). When dehydrated, glycerol also partially excreted with vapors. The amount of loss increases with rising of concentration of glycerol and with rising temperature. Extremal increasing of temperature causes thermal decomposition of glycerol, decreasing the volume of product and spoiling of color or being dim of its color. Glycerine in a high concentration is very viscous, so intensive circulation is used during the drying process. In order to prevent glycerol evaporation and to prevent thermal decomposition, glycerol water is evaporated in the vacuum-evaporation devices, by vacuum and by liquid circulation.

During the dehumidification process, the glycerin has a strong foam, as a result of, the formed foam absorbs to vacuum system, much amount of glycerol is lost. Therefore, only vertical equipments with sufficient space for vapor, are used to concentrate glycerol. Vacuum equipments, in a various designs and in a various sizes, are used at oil and fat enterprises. Most often used one or multi-body devices with separate heater.

One of the most economically efficient equipment is continuous steam equipments with several corpuses. The advantage of these devices is that the secondary steam coming from a body acts as a steam vapor for the next body. This, in turn, results being saved steam consumption.

Glycerine water contains about 10-25% of glycerol. Glycerol water evaporates to obtain technical glycerin in concentration 86-88%. Evaporation is carried out in the vacuum-evaporation apparatus under vacuum and under intensive circulation of fluid.

Vacuum-evaporation devices, in various designs and in various sizes, are used in the oil industry. The vacuum-evaporation devices with heater, are widespread. These devices are single-body and multi-body.

The two-body vacuum-evaporation apparatus «Pod'yomnik» is widely used in the oil industry. It consists of two corpus, each body has a heater and a evaporator, the first corpus operates at atmospheric pressure, and the second corpus works in a vacuum equal to 650-680 mm mercury column.

Technological scheme of continuous operating device "Podyomnik" (Fig. 39). Purifyed glycerine water comes into the heater (1) from box(14) through the adjuster (3) of the first body, via pump(15), where it is heated with steam in a pressure of 0.5 - 0.8 MPa; glycerine water, which is heated up to boiling temperature,(2) is distributed to the vaporizer, where the water evaporates from the solution. The concentrated glycerine water is supplied to the heater (9) by means of adjuster(7), where it is heated with secondary steam. The ready glycerine is continuously removed from the vacuum-evaporator (8) by means of remover(12). The condensate of secondary vapor (9) is freed from the heater (11) by means of a remover.

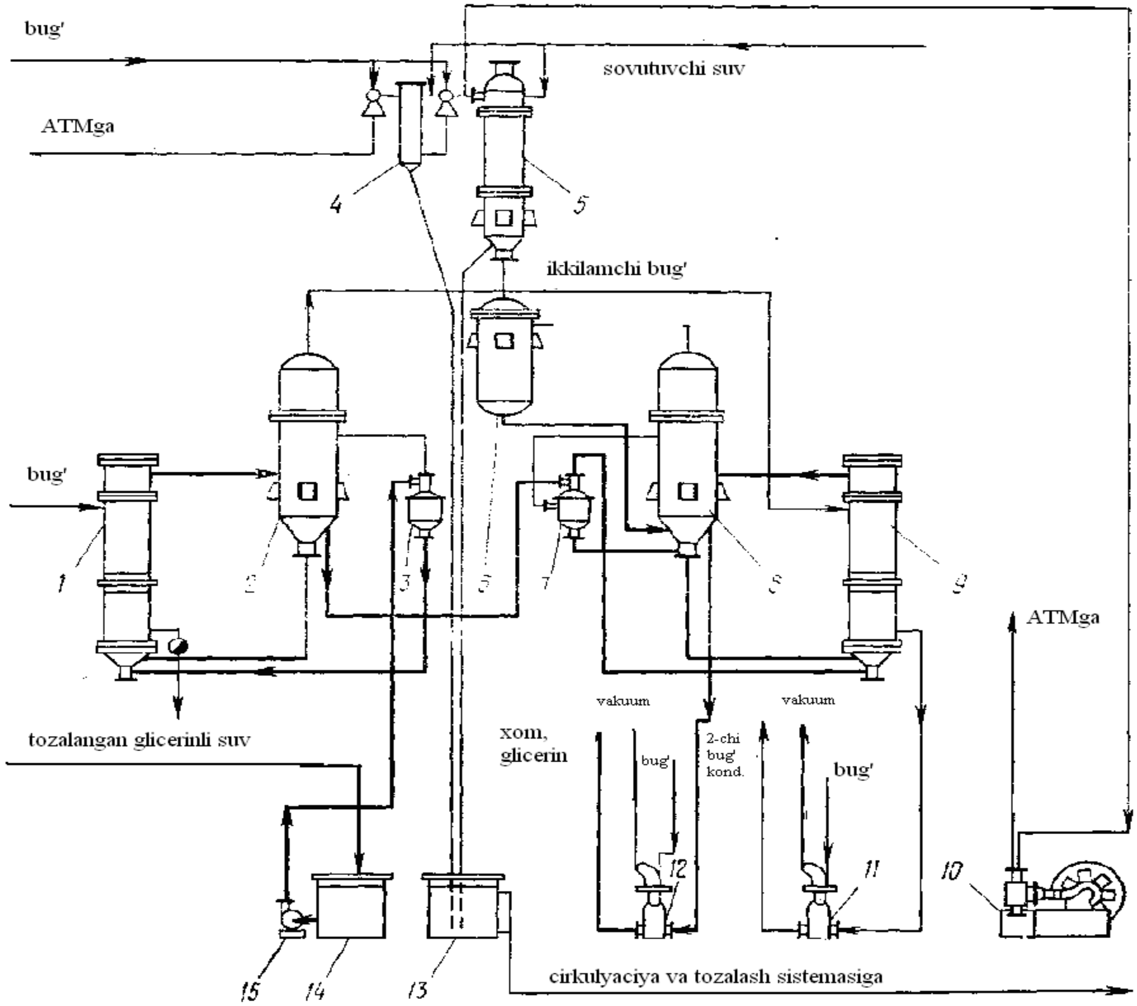

Figure 39. Technological scheme of two-body continuous operating device "Podyomnik"

Glycerol concentration is maintained at a moderate level with density regulator. The vapor goes to the barometric condenser (5) through the dropholder (6) from the heater (8), and uncondensed steam and gases are extracted with the first-stage ejector and sent to barometric condenser (4). Air and gases are emitted into the atmosphere by a second-stage ejector. The water in the condensers (4.5) flows through the barometric tube (13) to the well. During operation, the vacuum is generated by vacuum pumps (10).

There two types of the apparatus of this model. The heating surface of the heater is in 30m^2 (2x15 m^2) and in 60 m^2. Their structures and operations are the same.

The power of each unit is 4 tonnes per day and 8 tonnes per day for 88% of the glycerol.

Table 18

Quality indicators of technical glyserine

Indicators	grades of the glyserine		
	I	II	III
Glycerin content,%, no less than	86	86	78
The amount of ash,%, not more	0.35	1.8	9.5
Non-volatile organic residues,% not more	0.85	2.0	4.0

According to the quality indicators, glycerine is produced in grades I, II and III .

According to organoleptic indicators, I and II grade raw glycerol should be clear, with no foam on the surface and light yellow to dark brown. The III grade is allowed to be slightly dim, but its color should not be dark than brown.

According to the physical and chemical parameters, raw glycerol should conform to the requirements specified in Table 11.1

Test questions

1. Importance of glycerine production
2. Methods of glycerine acquisition
3. Acquisition of technical glycerine
4. Acquisition of distilled glycerine

6- LECTURE
DISTILLED GLYCERIN PRODUCTION TECHNOLOGY

Plan: Obtaining distilled glycerin. Purpose and essence of glycerin distillation. Location of open steam, rarefaction, temperature. The composition of the tar and its application. Waste and loss from distillation. Distilled glycerin bleaching.

Key words and phrases

Lead oxide; Olive oil; Nitroglycerine; Technical glycerine; Distilled glycerol; Distillation cube; Vapor heater; Vapor; Condenser

Acquisition of distilled glycerol. Distilled glycerine has a higher concentration (98%) and quality than technical glycerine.

There are two ways of getting distilled glycerine:

1) Distillation of technical glycerine

2) Purification of glycerine water by ion exchange method and then dehydration.

Removal of the compounds from raw glycerine is carried by distillation with a water vapor, under vacuum.

The boiling temperature of pure glycerine is 290^{0}C. At such temperature glycerol is decomposed to acrolein and various acids. Therefore, distillation at atmospheric pressure can lead to deterioration of the quality of glycerol. Currently, distillation of glycerine is carried out under vacuum (15-20 mm mercury column) at 170-180^{0}C. It is gradually or fractionally condensed the steam which is generated during glycerine distillation. Air and water-based condensers are used in this case. First of all, the glycerol, the component which has a high boiling temperature is condensed with, which means that glycerol, in a high concentration 98%, is obtained after the air condenser.

Distilled glycerine, for the reception of high and 1-grade glycerol, is bleached with activated charcoal (0.25-0.75% to weight of glycerol). The whitening process is carried out at 80^{0}C for 2-3 hours.

Technological scheme of glycerin distillation apparatus (Fig. 40). The raw glycerol is removed, from the box (1) to the heater, by vacuum (3), where it is heated up to 80-90^{0}C with vapor in the pressure of 0.2 MPa, then it falls to the distillation cube(5). The water vapor, generated in the heater, falls into the condenser(9). Glycerine is heated up to 175-176 ° C with high pressure vapor (1,4-1,5 MPa) in the distillation cube. Open steam is dispensed to the cube, from the heater(2) through bubbler. Open steam, in the steam heater, is heated by high-pressure steam from distillation cube.

The glycerol and water compounds from the distillation cube (5), come to the condensation system via the droplet separator (7). It consists of two air condensing groups, each consisting of four and five vertical mounted and a series of condensers. Condensed glycerol flows to collecting concentrators (17), where it is heated to $117-120^0$C, where excess moisture evaporates and distillate concentration is 98.5-98.7%. The finished product is collected in collecting tanks(18).

Glycerine and water vapors (9,8,11), which are not condensed in the air condensers (7), come to the pipe condensers and cooled with water. The condensate (13), from the condenser (9), is collected to the "first sweet water" collecting tank.

Then the steam comes to the second water condenser(8), which is connected to the collector (12). "Sweet water", from tanks (12,13), is collected in the next tank (16), after which it is sent for drying. The steam and gases from collector (12) comes to the third water condenser(11), through the droplet holder (10), and (15) collects in the "third sweet water" collector, used for the hydrolysis of fats; non-condensed gas-air compounds are released to the atmosphere using a vacuum pump (14). The residual pressure in the device is 15-20mm mercury column. The temperature of the water, releasing from the water condensers, should be as follows:

in the first - 35- 45^0 C; in the second $30-45^0$C; in the third $15-20^0$ C.

The tar (gudron),collecting in the distillation cube, is deducted and lowered to the tank for tar(19).

The capacity of the unit is from 6.3 to 8.6 tons per day, depending on the quality of the glycerol.

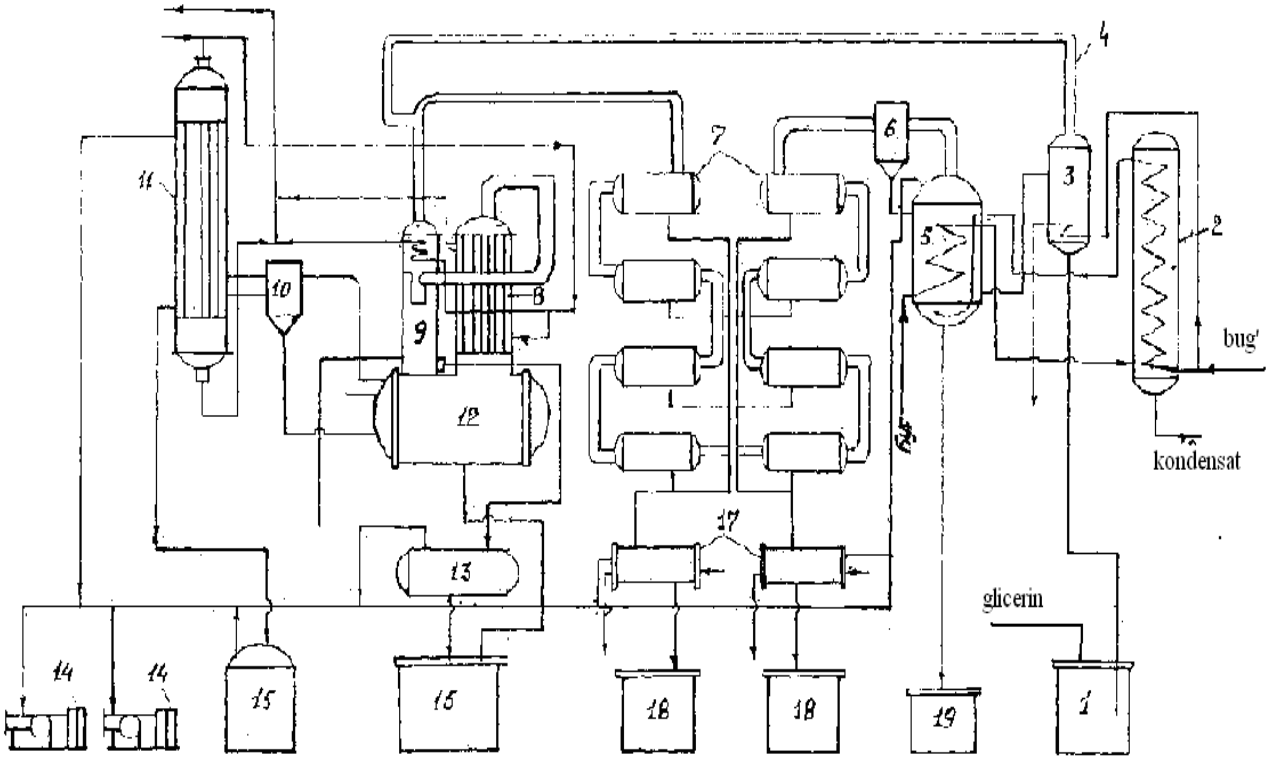

Figure 40. Technological scheme of glycerine distillation apparatus

Bleaching of distilled glycerine. To obtain high and first-grade glycerine, distilled glycerine is bleached with activated wooden charcoal, in order to enhance color and odour of the product, to reduce the amount of fatty acids, complex ether, non-volatile organic residue and mineral compounds.

The amount of activated charcoal consumption depends on the quality of the distillate, which is 0.25-0.75% of glycerine mass. The bleaching process is carried out with continuous mixing at 80^0C for 2-3 hours and separated in filter-press. If necessary, glycerine solution is diluted to 9.4% by adding computed amount of condensate to the mixer, to obtain the high and first-grade glycerine, which meets the standard requirements.

The activated charcoal, which is separated in the filter press, is first washed (in the separate mixer or in the filter-press) and then directed to evaporation. The amount of residual glycerol content in the activated coal should not exceed 2%. Used coal can be re-used after normal regeneration, ie sterilizing and drying at 100-110^0C as well as crushing.

Table 19

Quality indicators of distilled glyserin

Indicators	Glyserine			
	Dynamic	High grade	I grade	II grade
Glycerine content,%, no less than	98	94	94	88
Amount of ash,%, not more	0,14	0,01	0,02	0,25
Non-volatile organic residue,%, not more	0,1	0,02	0,04	0,25
Saponification coefficient per 1 g glycerine mg KOH, not more	0,7	0,65	non-determined	

The main physicochemical parameters of distilled glycerine should correspond to the requirements specified in Table 11.2.

Test questions

1. Glycerine distillation apparatus
2. The indicators of distilled glycerine.
3. Acquisition of glycerine.
4. Technological scheme of continuous operating apparatus "Podyomnik".
5. Quality indicators of technical glycerine
6. Technological scheme of glycerine distillation.

7 - LECTURE
SOAP STOCK PROCESSING

Plan: Raw fatty acid production technology. Methods for obtaining fatty acids by hydrolysis of fats and soap stocks. The purpose and essence of the process. Methods for saponification of soap stock. The decomposition process during the processing of soapstock and its essence. Extraction of crude fatty acids from cotton soap stock.

Key words and phrases

Saponification; Soapstock; Soapstock processing; Sulfuric acid; Soap decomposition; Calcium sodium; Water; Pigments; Neutral oil; Crude fatty acids

Fatty acids are used for the production of household and perfumery soaps, high fatty alcohols, alkyd resins, plasticizers, tires and for the production of other products. Fluid fraction of fatty acids(olein) is used for the production of chemical fibers lavsan, nylon. Technical stearic acid is used for the manufacture of tires, photo film, and polystyrene. As a raw material for the production of fatty acids, natural and hydrated vegetable and animal oils as well as soapstock are used. Fatty acids from fat are removed by hydrolysis and the fatty acids are distilled off. Getting fatty acids from the soapstock, plays an important role in the national economy. Because, by using soapstock, vegetable oils and animal oils are saved.

Processing of soapstock. Depending on the nature of oil and the process of refining, the soapstock contains about 30-60% fat. There are several ways to process the soapstock. Soapstock, which is obtained from the refining of light oil (sunflower), is processed with concentrated sulfuric acid as follows:

5% water is added to the soapstock to its weight. It is added concentrated sulfuric acid, by mixing with air, at the end of the process,there is should remain 2-3% free H_2SO_4 in the aqueous layer. This mixture is stirred for 1-1.5 hours at 85-95^{0}C, and defecated for 4-6 hours. As a result of decomposition of soap, free fatty acids and neutral fatty compounds are formed on the surface of the solution. Three layers are formed. The bottom, aqueous layer is poured to the sewege through the oil holder after neutralization. The intermediate layer (resin substances) is dispatched to the emulsion reservoir. High, soapstock, oily layer is washed to remove sodium sulfate and non-grease substances, which have a negative effect on decomposition and glycerol quality. Sometimes the fat layer is first washed with carbonate sodium and then with water.

The resulting fatty acids and neutral oils are decomposed. The amount of glycerol is about 7% to weight of neutral fat. After decomposition, fatty acids are distilled off. Soapstock from cotton oil is different from other oils, with a high content of fat, high viscosity and high amount of dyes, and with it’s black color.

The pigment variety and sophisticated chemical composition make it difficult to process the soapstock.

The soapstock contains neutral fat which is not well distillated with fatty acids during distillation. Befor decomposing with sulphate acid, soapstock is saponificated with caustic soda, ie all neutral oils in the soapstock are converted into soap.

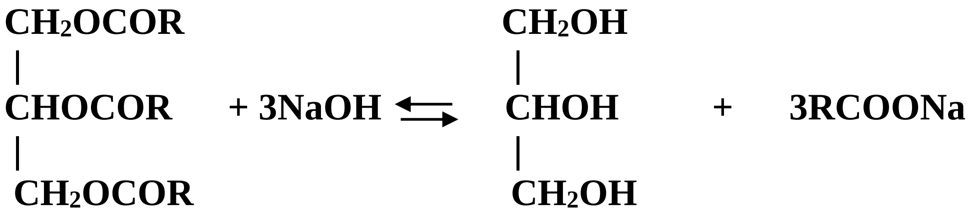

$$\begin{array}{l} \mathrm{CH_2OCOR} \\ | \\ \mathrm{CHOCOR} \\ | \\ \mathrm{CH_2OCOR} \end{array} + \mathrm{3NaOH} \rightleftarrows \begin{array}{l} \mathrm{CH_2OH} \\ | \\ \mathrm{CHOH} \\ | \\ \mathrm{CH_2OH} \end{array} + \mathrm{3RCOONa}$$

After that, the resulting soap decomposes with sulfuric acid.

$$\mathrm{2RCOONa} + \mathrm{H_2SO_4} \longrightarrow \mathrm{RCOOH} + \mathrm{Na_2SO_4}$$

There are two ways to get the soap from the cotton oil:

1) adhesive method (yelimli)
2) core method (yadroviy)

In the adhesive method, the soapstock is saponificated with a 30% -40% solution of caustic soda and the resulting adhesive mixture is decomposed with sulfuric acid without defecation. In the method of core , soapy adhesive is defecated and formed soap core is sent to the decomposition. The remaining soap adhesive in the boiler is neutralized with soapstock and salted with salt. Defecated core is dispatched to the decomposition, the undersoap alkali is dispensed to the oil holder.

The technological scheme for the production of crude oil acids, from soapstock of cotton oils (Fig. 41). The soapstock comes into the tank(1), then it comes to the soap cookware(3) with the pump (2). Soapstock, which is heated up to boiling temperature with open steam, is saponificated with 30-40% NaOH solution. The solution of the alkaline comes from the tank(9). Saponification continues about 4-5 hours by stirring, until formation of 0.4-0.5% excess alkali in the soap adhesive. Then suplement of steam is stopped and defecated for 4-5 hours. The knuckle(sharnir) is pulled into the tank of soap core using a tube (7) and it is dispatched to the vat(4) for decomposition, with pump(8).

The remaining soap adhesive in the boiler is neutralized with a soapstock and is salted with salt, defecated for 4 hours. The defecated under soap alkali is dropped into the oil holder(15). In the under soap alkali, There is should not exceed residual oil than 2%, alkaline than 0.5%, Na_2CO_3 - 0.8%. Together with under soap alkali, non-oil substances and dyestuff pigments also emerge (around 45%).

Fresh soapstock drops into the salted core, saponificated with caustic soda and the excess alkali is divided into two phases. After defecation in 4-5 hours, the core is dispatched to the decomposition with sulphate acid.

Soap with sulfuric, acid at 80-92% concentration at 90 °C, is mixed. The sulfuric acid comes in a thin stream from the measurer(10). When a large amount of sulfuric acid is given, it effervesces(ko'piklanadi) and egresses(chiqib ketadi) from the tank. If necessary, the condensate is added up to 22 to 30% to the soap. The condensate comes from the measurer(11). It is decomposed by mixing with steam. After addition of sulfuric acid, it is stirred for 1 hour and there is should be 1% free sulfuric acid in the sour water. Then it is defecated for 1 hour and sour water (12) is dropped to the oil holder for cleaning. The fatty acids are dispatched to the apparatus (14) for washing, from the tank(4), with pump(13). There is given condensate at the temperature 80-85^{0}C in the amount of 50-100% relative to the fatty acid weight, from the measurer (11). Washing is carried out until neutral reaction. Washing water should not contain soap and Na_2SO_4 salts. After 1.5-2 hours of defecation, the washing water was dropped into the oil holder(15). Washed fatty acids come into the tank(5) and pumped to distillation with pump(6).

Raw fatty acids must meet the following requirements.

the temperature of the substrate is not less than 28^{0}C;

the amount of non-saponificated substances, not more than 4%;

The moisture content should not exceed 2.5%.

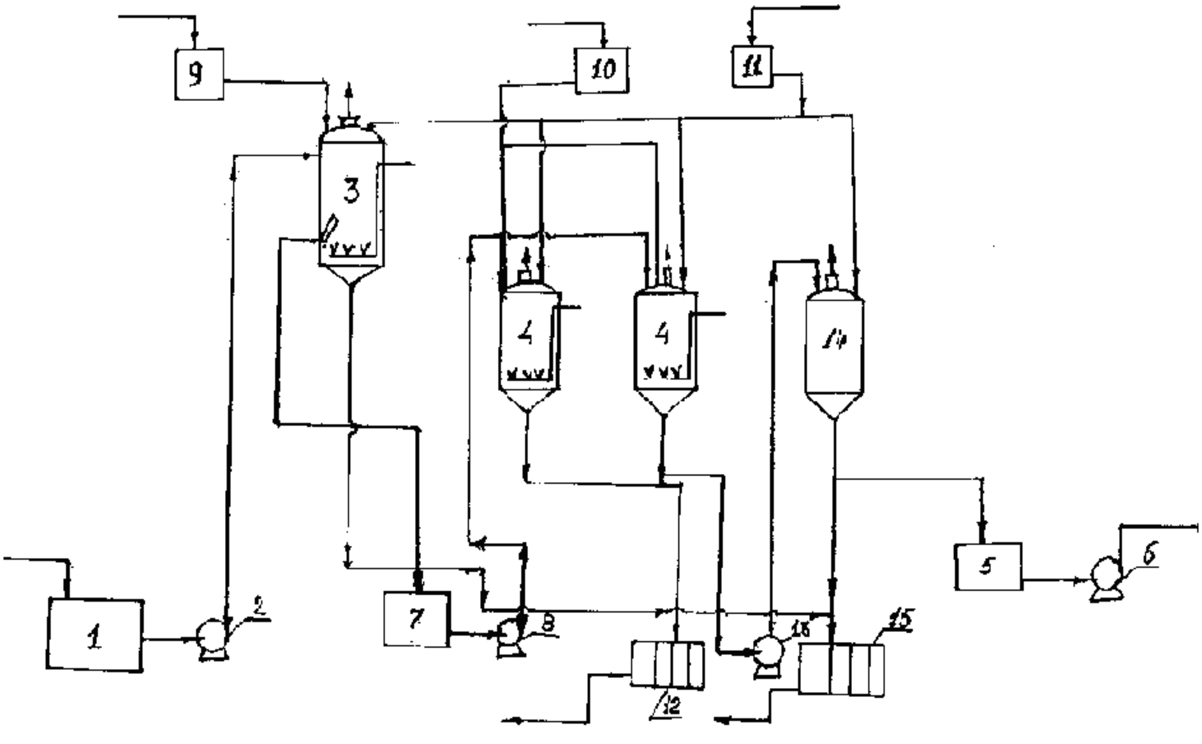

Figure 41. Technological scheme for the production of crude fatty acids from soapstock of cotton oil

Crude fatty acids are distilled to improve the quality of the obtained product and meet the needs of different sectors of the national economy.

Test questions

1. Importance of fatty acid production
2. Soapstock processing
3. Do we have the technology to obtain raw fat acids from the saffron?
4. Requirements to raw fatty acids
5. Use of fatty acids.
6. Methods of processing of soapstock
7. Fat content in the soapstock
8. Technological scheme for the production of crude fat from cotton oils
9. Raw materials, which is used for the production of fatty acids
10. Technological parameters of acquisition of crude fatty acids.

8 - LECTURE

TECHNOLOGY FOR THE DISTILLATION OF CRUDE FATTY ACIDS AND PRODUCTION OF DISTILLED FATTY ACIDS

Plan: Purpose and essence of fatty acid distillation. Composition of tar and their use as residues from the distillation process. Waste and loss of distillation. Standard quality of distilled fatty acids.

Equipment for the distillation of fatty acids. Heater-dryer. Continuous distillation cube of fatty acids: composition, operation, technical characteristics. Distillation cube heating source: high-pressure steam, VOT, heating element.

Key words and phrases

Distillation; Distilled fatty acid; Fatty acid; Palmitin; Stearin; Residual pressure; Gudron; Polymerization

Distillation of fatty acids. The purpose of distillation is to obtain fatty acids with a small amount of compounds in it. After development in the chemical industry, the purified fatty acids are widely used, it must meet the following requirements: the color should be clear, should not contain natural oil, and the minimum amount of non-saponificated substances. Fatty acids meet these requirements only after distillation.

At atmospheric pressure, the fatty acids have a high boiling point (above 250^{0}C). Therefore, in the distillation process, which is carried out at atmospheric pressure, fatty acids break up, and polymerisation occurs with unsaturated fatty acids. Distillation is carried out under vacuum to reduce boiling temperature. We observe the effect of the vacuum on boiling temperature on palmitin and stearic acid.

	5 mm on mercury column.	760 mm on mercury column.
Palmithin	192	354
Stearine	209	370

That means, stearic acid boils at 370 ^{0}C in the atmospheric pressure, ie above 760mm mercury column. If the pressure is reduced to 5mm mercury column, the stearic acid could boil even only at 209 ^{0}C. Hence, the lower the residual pressure in the apparatus, the lower the fatty acids' boiling temperature. Distilling temperature can also be reduced by the use of sharp steam. During distillation, COA(crude oil acids) is heated off, in the distillation cube, until boiling of them, generated vapor is released and condensed. There are dyestuffs with high boiling temperature, essential fatty acids, oxy acids, metal soaps, polymerization products, mineral salts and neutral fats in the distillation cube. The residual substance in the cube is called a tar (gudron).

Currently, the distillation device, in the “Komsomolets”model, is used in oil refineries.

In periodically operating devices, fatty acids are given to the distillation cube where they are heated up to 230-240 °C and continuously distilled off with a sharp vapor. The residual deck of distillation accumulates gradually in the cube. Device is stopped to lower the tar. At high temperatures, fatty acids can be polymerizable as a result of their long stay in the cube, resulting in a decrease in the amount of distillate. In continuous working devices tar is released continuously. This device has an indicator of a high technical efficiency.

Technological scheme of continuous distillation of fatty acids (Fig. 42). The crude fatty acids come into the tank(1), they are taken to the vacuum drying apparatus(2), where the fatty acids are heated up to 120-130 ° C, dried, deaerated, and easily volatilizing agents are disposed of, they are collected in the holder(11). The fatty acid is held in the drying apparatus at a pressure of 25-30 mm mercury column, in 40-50 min. The fatty acids, from the drying apparatus, are continuously transferred to the distillation cube (3) where the fatty acids are gradually heated up to 210-240 ° C, and evaporated by giving 6-7% of sharp vapour (pressure is 10mm mercury column). The fatty acids come to the condenser (4) by passing the droplet holder(12). The condensed fatty acids are collected in the vacuum collector(5) and then pumped to the reservoir (6), and pumped from there to the warehouse or to the soap shop with pump(7).

The gudron is continuously lowered and is collected in the tank(8); where it is cooled down to 70-75^{0}C, then it goes into the tank (9) and sends to storage with pump(10).

Gudron contains neutral fat, fatty acids (20-25%), oxy acids, non-saponificated substances, gossypol and various non-volatile substances. The amount of tar(gudron) depends on the amount of these substances in raw fatty acids and the distillation regime. High temperature and airflow into the distillation cube increases the amount of gudron. Vacuum is produced, in the system, with three-stage vapor vacuum pump.

The continuous operating distillation cube (Figure 43) is a cylindrical apparatus, which 9 sections (1) are installed in the bottom. The sections are heated by means of an electric heater (5) or high temperature organic heat exchanger vapor (VOT). The distillation cube (6) is provided with bubler for supply open vapour in a pressure of 0.3MPa. Crude fatty acids flow from the central section through the 8 sleeves which are placed along the circle of cube, by shtutser (2). Distillation occurs and fatty acids begin to evaporate.

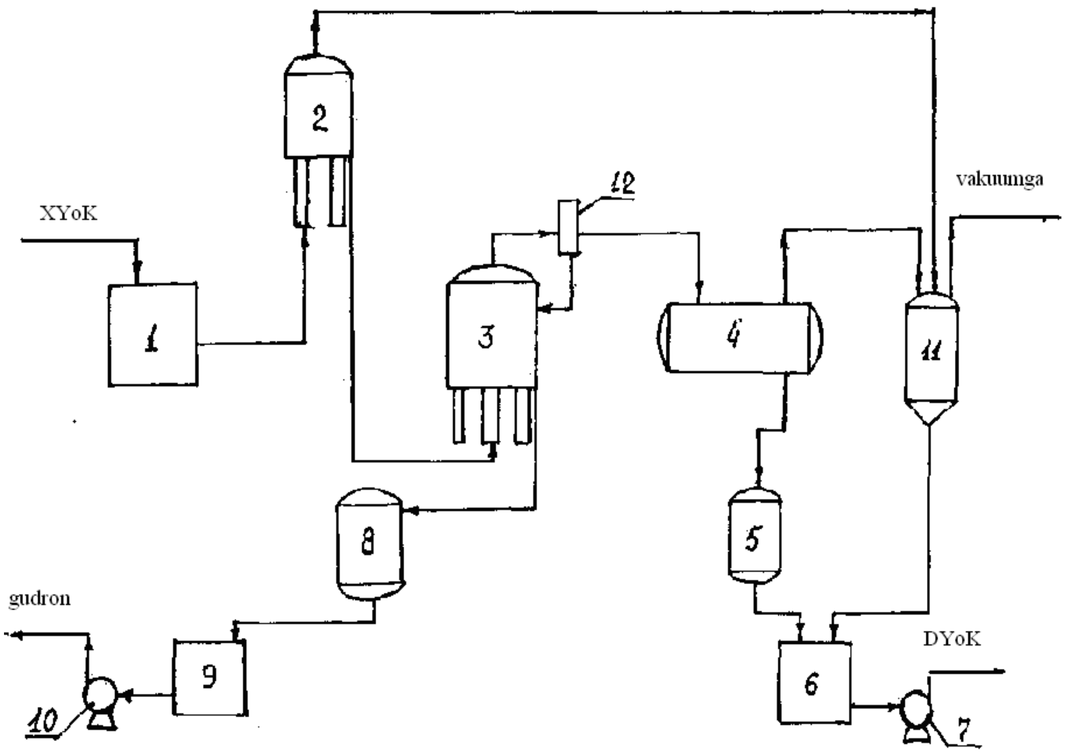

Figure 42. Technological scheme for continuous distillation of fatty acids

At the top of the cube there are two conical grips (3) and a grille with 5 mm hole in it, that mechanically separate fatty acid droplets. Through the branch pipe (4), the fatty acid vapors go to the condenser.

And gudron goes out of the last part of the device continuously. Cube is made from acid-resistant steel, heating surface of it, is 11.85 m^2.

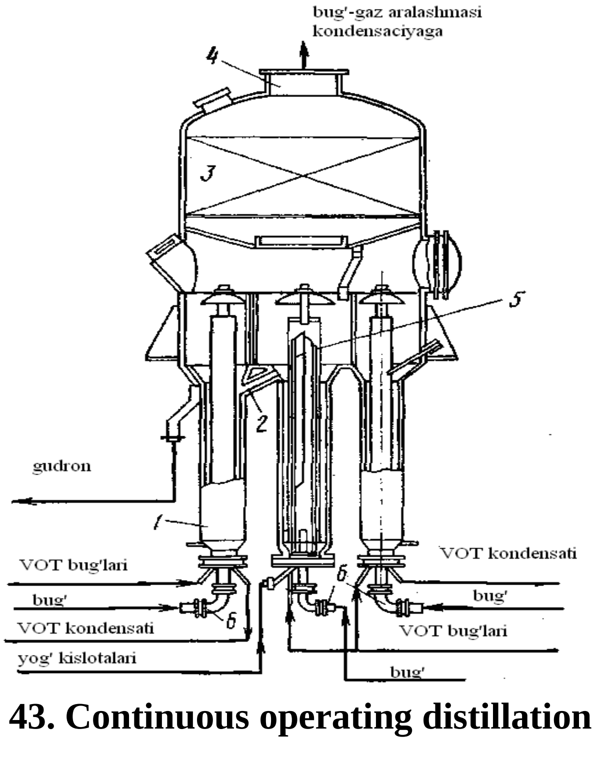

Figure 43. Continuous operating distillation cube

Technical olein and stearin extraction. Liquid fatty acids consist mainly of mixture of oleic acid, which contains a small amount of saturated fatty acids, organic compounds in the form of polymerized and decomposed fatty acids (aldehydes, ketones, hydrocarbons, etc.).

The technical olein is made up of three A, B and V brands. A and B brand of oleic acids are distilled, and the brand V is not distilled. Their main quality indicators are shown in Table 19.

Table 19

Indicators of technical olein

Name of indicators	brands of olein		
	A	B	V
Fatty acids in water-free product,%, no less than	-	95,0	92,0
The amount of total fatty acids in the water-free product with naphthenic acid of not more than 15%, in %, no less than	95,0	-	-
The amount of not saponificated and non- saponificated substances,%, is not less	3,5	3,5	6,5
Iodine number, % J_2	80-90	80-105	-
Solidifying temperature, ^{0}C, not more	10,0	16,0	34,0

The raw material for B-brand olein is a mixture of two or three different vegetable oils. The mixture should be structured so that, the solidifying temperature of obtained acid should be 14-18 °C and iodine number should be 90-105% J_2. The prepared mixture is decomposed to a degree of hydrolysis by no less than 95%, by non-reactive or contact method. Fatty acids that do not contain sulfuric acid are dried and then tested to meet the specific temperature requirements for acid, to meet requirements for iodine and acid numbers, and then distilled.

The technology of A-brand olein production is the same as only 15% of naphthenic acid is added to the fatty acid distillate.

The V-brand of olein is made up of washed and dried but not distilled vegetable oils or fatty acids of the soapstock.

To the technical oleic acid, which is used in the textile industry, it is added 0.5% of b-naphthol, to protect from the oxidation resulting in spontaneous combustion of the lubricated textiles. Technical stearic acid (stearin) is a mixture of saturated fatty acids, mainly stearin and palmitine, and a small amount of unsaturated fatty acids, mixture of olein and isoolein acids. In the industry, stearine is produced by hydrolysis of deep hydrogenated vegetable oils and animal fats, then by washing, drying and distilling of produced fatty acids.

Stearine is produced in different varieties depending on the purpose of its use, the main quality characteristics of which are given in Table 20.

Table 20

Indicators of stearin

Indicators	Stearine			
	special		I-sort	II-sort
	A brand	B brand		
Colour	white	white	white	white, slightly yellowish
The iodine number, not more, J_2%	3,0	10,0	18,0	32,0
The amount of non-saponificated substances is no more than%	0,5	0,5	0,5	0,7
Solidifying temperature, not more, 0 ° C	65,0	59,0	58,0	53,0
Moisture,%, not more	0,2	0,2	0,2	0,2
Amount of ash,%, not more	0,2	0,2	0,2	0,2

Stearine can also be obtained by hydrogenation of fatty acids from the soapstock of cotton oil, in which the product quality is low, the color yellow, content is up to 0.9% of non-saponificated substances and moisture content is 0.5%, the ether number is 3-5 mg KOH . Stearine is delivered to the consumer with railroad tanks or in sacks as a shape of coin. To formation of shape of coins, distilled fatty acid is sent to a refrigeration drum at 70^0C ($80-90^0$C for A-brand stearine). The cooling drum consists of two steel cylinders on top of each other, and cooling water is circulated between the cylinders. Stearine, which has been exterminated with knives from the cooling drum surface, is delivered to semi-automatic weights and packed into kraft bags.

Test questions

1. The need to obtain distilled fatty acids
2. Distillation methods
3. The technology of continuous distillation of fatty acids.
4. Distillation modes. 5. Purpose of distillation.
6. Distillation - what is it?
7. Vacuum and temperature during the distillation process
8. Technological schemes of continuous distillation of fatty acids.
9. Residual product of distillation process.
10. Polymerization process

9 - LECTURE

PROPERTIES OF SOAP AND SOAP SOLUTIONS

Plan: Physical and chemical properties of soap. Type, range and use of detergents. The assortment of household and perfumed soaps. Ways to make greasy soap. Soap classification. Physicochemical properties of soap and its aqueous solutions. Physical and chemical properties of soap. Properties of an aqueous solution of soap. The critical concentration of missella formation. Surface activity. The ability to form foam. The wetting capacity of soap solutions.

Key words and phrases

Soap; Solubility; Electric conductivity; Density; Melting temperature; Hydroscopic; Soap hydrolysis; Stickiness; Polymorphism of soap; The nature of soap solution; Anion; Kation; Making mitsella; Solubilation; Surface activity; Flushing feature; Detonation-peptisation

Soap is the salt of high molecular oil and naphthenic acid. The soap, which is used for washing and cleaning, is sodium and potassium salts of fatty acids, comprising from 10 to 20 carbon atoms. The salts of fatty acids with less than 10 carbon atoms, do not have the ability of washing. Soap is used in the following ways: household soap is mainly used for washing fabric and other things, perfume soap is used for cleaning,for washing the face and hands. Metallic soaps (alkali - earth and heavy metal's salts) are used in the textile industry, plastics and rubber industry, and in the manufacture of pharmaceutical preparations.

The household soaps are currently produced in three types - soaps with 60%, 70% and 72%. The development of distillation devices of fatty acids results in improvements in odour and in colour of waste materials of oils and oil substitutes, as well as created the opportunity of producing of high-quality soaps in 70%. Solid household soaps are produced at 250 and 400 g weights. Liquid soaps are made for economic and technical purposes, with 40-60% of fatty acids.

Aromatic soap contains 73-80% fatty acids and currently produce "Extra", I, II, III group and baby soap (80%). Solid aromatic soaps are produced from 10g to 200g weights, respectively. They may be white or colored, open or packed.

Methods of producing of soap. Soap is produced by neutralizing fatty acids with penetrating and carbon alcali.

$$\mathbf{RCOOH+NaOH \rightleftarrows RCOONa+H_2O}$$

$$\mathbf{2RCOOH+ Na_2CO_3 \rightleftarrows 2RCOONa+CO_2+H_2O}$$

Soap also forms as a result of saponification of oil.

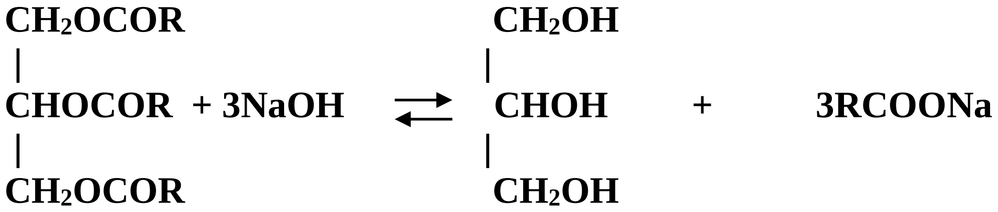

$$\begin{array}{l} \mathbf{CH_2OCOR} \\ | \\ \mathbf{CHOCOR} \\ | \\ \mathbf{CH_2OCOR} \end{array} \mathbf{+ 3NaOH} \rightleftarrows \begin{array}{l} \mathbf{CH_2OH} \\ | \\ \mathbf{CHOH} \\ | \\ \mathbf{CH_2OH} \end{array} \mathbf{+} \quad \mathbf{3RCOONa}$$

Potassium carbonate and potassium hydroxide are used in producing of liquid soap.

The reaction of obtaining of etonolaminated soap is as follows:

$$\mathbf{\underset{\text{Three Etonolamine}}{RCOOH+N\,(CH_2CH_2OH)_3} \longrightarrow \underset{\text{Etonolaminated Soap}}{RCOONH\,(CH_2CH_2OH)_3}}$$

In any method of soap, the process of saponification is carried out with excess alkaline to prevent sour soap formation.

The formation of sour soap is expressed by the following reaction.

$$\mathbf{RCOONa + RCOOH = \underset{\text{sour soap}}{RCOONa \cdot RCOOH}}$$

According to the content of fat and alkaly, soaps may be in a solid, soft or liquid form. Solid soap formates from solid fatty acids, liquid soap and soft soap formate from soft fatty acids. In addition, potassium soap is more softer than sodium soap.

Physical and chemical properties of soap

Solubility. The soap is well dissolved in alcohol, in hot water, and potassium soap is better soluble than sodium soap. The increase in the number of carbon atoms, in the soap molecule, leads to the reduction in its solubility. Soap does not dissolve in diethyl ether, gasoline, in acetone. Soaps of unsaturated fatty acids are better soluble than soaps of saturated fatty acids, and solubility increases with increasing of temperature. Sour soaps are non-soluble in water, but they have good solubility in non-polar solvents.

Electroconductivity. The soap solution in water has a peculiarity of electroconductivity. This feature is explained by the disassosation of soap molecules.

$$\mathbf{RCOONa \rightleftarrows RCOO^- + Na^+}$$

When the temperature rises, the electrical conductivity increases. When electrolyte is added to the soap solution, the electroconductivity increases.

Density. The density of soap is about 960-1020 kg/m^2 depending on the nature and cooling conditions of them.

Melting temperature. The melting point for water free soaps is 225-270 °C. Melting point of 60% soap is less than 100^0C.

Gigroscopic. Soaps have peculiarities of obtaining moisture and soaking, there is separates heat. The potassium soap is more hygroscopic than sodium soap.

Soap hydrolysis. Soap is hydrolyzed in aqueous solutions:

$$\mathbf{RCOONa + H_2O === RCOOH + NaOH}$$

The degree of hydrolysis depends on the nature of the soap, the concentration of the solution, and the temperature. Hydrolysis increases when concentration drops. As the temperature increases, hydrolysis of soap increases. Hydrolysis decreases with adding alkaline and alcohol to the solution.

Influence of acids on soap. Soap is decomposed and free fatty acids are released by acidification.

$$\mathbf{2RCOONa + H_2SO_4 \longrightarrow 2RCOOH + Na_2SO_4}$$

The formed free fatty acid can react with neutral soap to form sour soap. It must be boiled for a long time so that the soap can be completely disintegrated.

Viscosity. Soaps of saturated fatty acids more viscous than soaps of unsaturated fatty acids. Penetration of soap solution, with decreasing of the temperature, increases the viscosity of soap solutions. As a result, there is formation of core, and under soap alcali.

Transition-decomposition reaction. Soap can take the reaction of transition in a aqueous solutions. For example, when sodium soap is treated with potassium carbonate, it is partly converted to potassium soap.

$$\mathbf{2RCOONa + K_2SO_3 \longrightarrow 2RCOOK + Na_2SO_3}$$

When it is exposed to calcium soap with sodium carbonate, it converts tosodium soap.

$$\mathbf{(RCOO)_2Ca + Na_2CO_3 = 2RCOONa + CaSO_3\downarrow}$$

Soap polymorphism. According to the methods of soap production and processing there are several polymorphic processes in them. They are distinguished by the size the shape of crystals, and have different properties such as solidity, density, solubility, and T_{melt}.

It is confirmed that, there are polymorphic α, β, δ and ω polymorphs in soap.

It is clarified that there is a mixture of phases of β,δ,ω in the soap. α converts easily to β-phase.

Soaps have high solubility, good foaming properties in β - modification. It is more solid, obtains less moisture, consumes less than δ and ω - phases. It does not appear a slimy layer on the surface, keeps shape when it cools, does not crack and does not separate into layers, over the the soap, which has ω - phase in it. ω modification is resistant to temperature above 70 ^{0}C. ω-modification is converted to β modification in mechanical processing. The ω-modification soap has low foaming, low melting speed, and softer than the β phase soap. δ-modification occurs at low temperatures (30 ^{0}C). δ modification takes place between phases β and ω. When soap obtains in the vacuum - drier, as a result of rapid drying, first α-phase formed and rapidly converted into β-modification. This process accelerate when the soap is heated up to 120-160 ^{0}C before vacuum-drying. Mechanical treatment (rub of soap , mixing, pressing, squeezing through smaller holes) in required conditions (the temperature of soap mass, pressure in density) can lead to more β-modification in soap.

Physical and chemical properties of aqueous solution of soap. The nature of soap solution. There are two different ideas about the nature of soap solution. Some people believe that soap solutions are colloidal, ie a two-phase system. High viscosity of concentrated soap solutions, the boiling temperature does not change with the concentration of the solution, all of them are typical to the colloidal solution. Others think that soap solutions are a one-phase, real or molecular solution. This is evidenced by the presence of electroconductivity, hydrolysis properties. Colloidal and molecular properties of soap solutions are explained below.

Many features of soap are explained by its molecular structure. The formula of soap consists of two oleophilic (inclined to oil, non-polar) and hydrophilic (inclined to water, polar).

$$\mathbf{\underbrace{CH_3\text{-}(CH_2)_n}_{oleofil} - \underbrace{COONa}_{gidrofil}}$$

The soap's molecule can be compared to a pin. The stick is non-polar, cap is polar part of the molecule. So the soap is diphill, which in turn provides the ability of washing. The structure of the soap solution is complicated, which is explained by: there is RCOONa, RCOOH and NaOH in the aqueous solution as a result of soap hydrolysis at the same time. Soap is dissociated.

$$\mathbf{RCOONa \rightleftarrows RCOO^- + Na^+}$$

Fatty acid, in turn, is dissociated.

$$\mathbf{RCOOH \rightleftarrows RCOO^- + H^+}$$

The aqueous solution contains soaps and fatty acids, and the fatty acid molecule reacts with soap and forms sour soap.

$$\mathbf{RCOONa + RCOOH \rightleftarrows RCOONa \cdot RCOOH}$$

Sour soap does not dissolve in water. They form suspensions. Sour soaps of unsaturated fatty acids can dissolve in the soap solution at high temperatures. Because of the pulling, hydrocarbon radicals, to each other in concentrated soap solutions, the cations are associated, and the COO-groups move away from each other. Therefore, associations become in the shape of the sphere. They are called ionic micelle, as shown in Figure (41.a) (also referred to as spherical mycelium). Also due to its structure, the micelle ions have an electric charge.

Soap molecules are also associated in the solutions, which have a high concentration, initially with COONa groups, which were pulled to each other, composed adjacent molecules. These pairs form associations due to the molecular weight gravity, and they are called plate micelle according to their shape (Fig. 13.1.b).

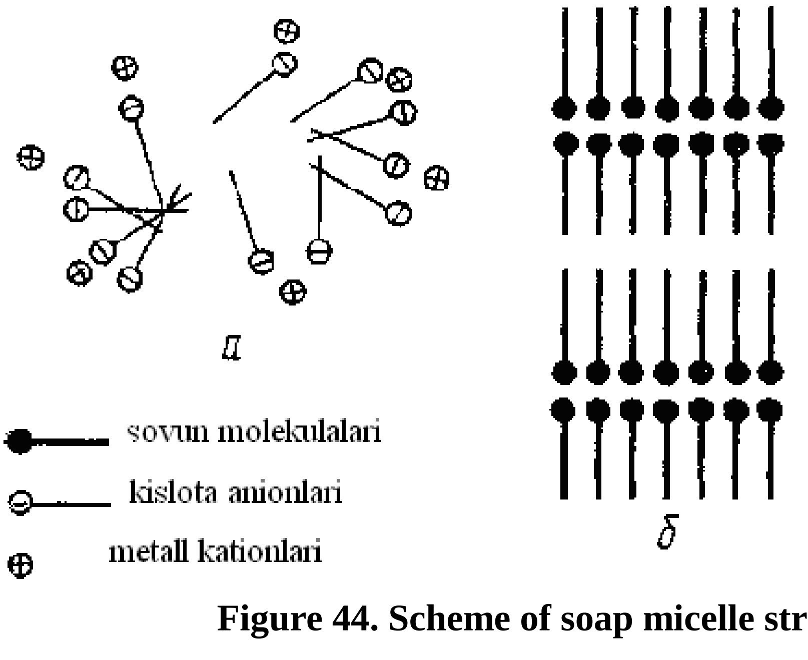

Figure 44. Scheme of soap micelle structure

Depending on the consentration of acid anions, ionic and plate micelles are in the balance position in the soap solutions,.

$$\begin{tikzcd} \text{Soap molecule} \arrow[r, shift left] \arrow[d, shift right] & \text{soap ion} \arrow[l, shift left] \arrow[d, shift right] \\ \text{Plate micelle} \arrow[u, shift right] \arrow[r, shift left] & \text{ionic micelle} \arrow[l, shift left] \arrow[u, shift right] \end{tikzcd}$$

Critical concentration of production missella(CCM). Depending on the change of the concentration of soap solution, the formation of two types of micelle have a significant impact on the properties of this solution.

Concentration of soap solution, which is observated formation of micelle, is called CCM.

CCM - depends on the nature of the soap, the temperature (solution) and the presence of the electrolyte. As the temperature rises, the CCM of the solution increases. Adding alcohol to the soap solution increases the CCM, which is associated with good melting of the soap in alcohol. CCM is practical significant. The concentration of detergent solution is equal or higher than that of CCM. When the concentration of soap solutions is lower than CCM they do not have the ability to wash.

Solubility. The concentrated solutions of soaps have the ability of colloidal dissolvation of the water-insoluble organic matters (oils and fats, aliphatic and aromatic hydrocarbons).

In the solubilisation, the organic matters takes place between the hydrophofic part of the soap molecules. Growth of the concentration and temperature of the soap solution, increases solubility. Free fatty acids, in the soap, improve solubility. Figure 42 shows the change in placement of plate micelle in the solubilisation.

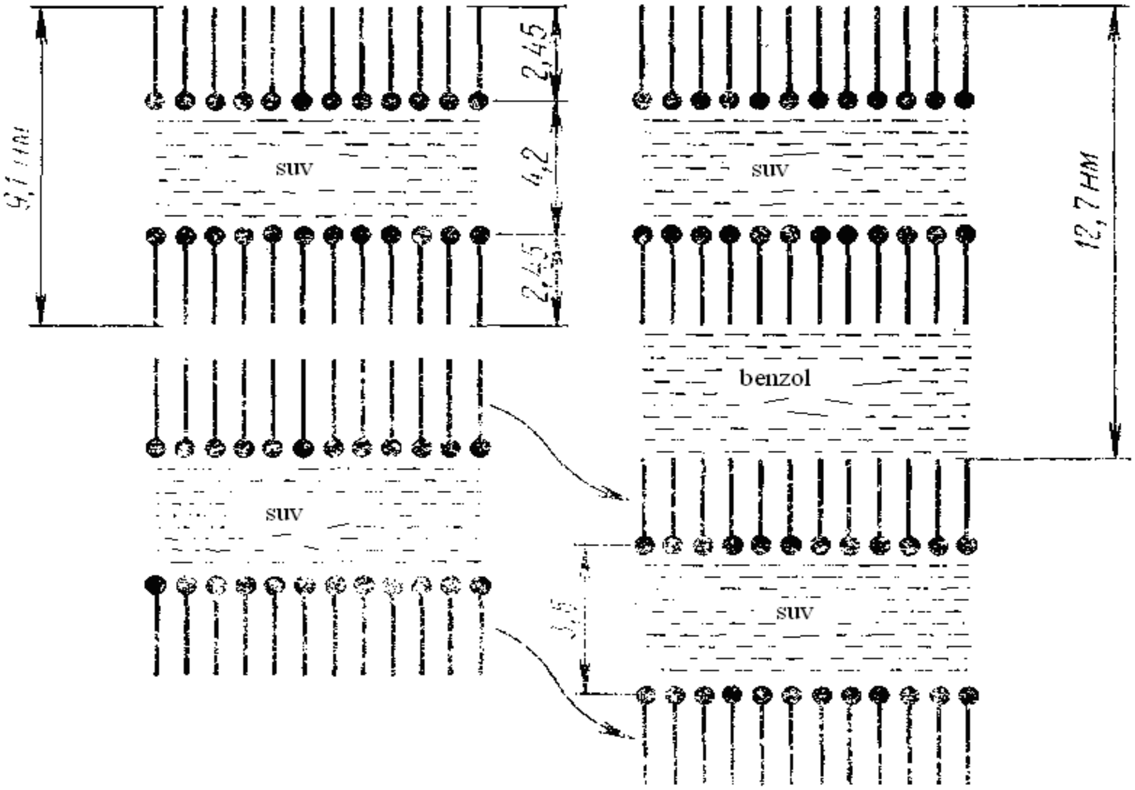

Figure 45. The scheme of benzole dissolvation in the sodium oleate micelle

Surface activity. The aqueous solution of the soap is active on the surface, which reduces the surface tension (reducing the free energy of the adjacent surface between the phases). Soap molecules in aqueous solutions form a mono-molecular layer by adsorbation onto the adjacent surfaces of two phases (air-water, liquid-liquid, water-solid substance). As a result, the tension decreases. Depending on the temperature increase, the surface tension of the soap solution decreases.

Surface tension: water at 20^0C - 73 erg / cm^2
kerosene at 20^0C - 24 erg / cm^2
alcohol at 20^0C - 22 erg / cm^2
mercury at 20^0C - 472 erg / cm^2
water at 80^0C - 62 erg / cm^2

Because of the low surface tension, soap solution wet easy, defferent substances. Including oleophilic substances.

Foaming feature. The foam is a mobile dispersal system, where air bubbles are covered with a soap (Fig. 46). Foam is a three-component system comprising air-water-surfactant (SAS)(surface activ substance).

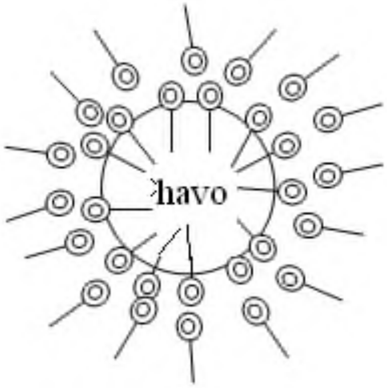

Figure 46. The structure of the foam particles

The foam appears,when there is low surface tension. Creating a stable curtain on the adjacent surfaces of the air-water, of the soap solution determines the foaming feature, which ensures the stability of the foam.

This property is characterized by the quantity of foam of soap solution.

The persistence of the foam is determined by the ratio of the volume of foam,which is disintegrated after 5 min, to the original volume.

The feature of foaming and persistence of the foam depends on the nature, concentration, temperature, and presence of the electrolyte, of the soap.

Soaps of high molecular saturated fatty acids (C_{16}, C_{18}) form a small, but stable foam. Soaps of the medium- molecular fatty acids form a large-celled foam. The foaming feature of high molecular fatty acids increases when heated.

Foaming ability of the soaps of the low molecular fatty acids reduces, when the temperature increases. Potassium soap of high molecular fatty acids has higher foaming ability than sodium soap. On the contrary, sodium soap of the low molecular fatty acids has a good foaming ability than potassium soap.

Decomposition-peptization ability. The formation of the curtain on the adjacent surfaces of the phases, of soap solution, creates the condition for the solid surface to be gydrophill and wet. As a result, soap solution easily penetrates into the porches(g'ovak) and cracks of the solid particles and breaks them up and creates a small particle suspension. Solid particles break down under the pressure of the controlling thin layer of soap solution. The appearance of a thin layer on the surface of a hard body allows the holding of the suspended particles to maintain stability.

Peptisation and stabilization depend on the nature, temperature, and degree of crushing of the body, of the soap. Aqueous solution of soap is distinguished from synthetic surfactant (SS) by the high stabilizing ability to resist contamination of the surface of the fabric.

Washing ability of the soap. In order to know the washing ability of the substances, initially we need to figure out that, what is it being wet. In good wetting, the fluid spreads over a rigid body and penetrates into the cracks. Bad wetting is like motion of the mercury drops on the mirror. Mercury drops do not leave any traces on the mirror surface. Also, the oleophilic surface does not moisten well. This is explained by surface tension. The surface tension needs to be minimized to improve the moisture content. As you know, alcohol and kerosene are moisten well than water, especially than mercury. The question arises: how is it possible to wash with water with high surface tension, and low moisten ability? Is it possible reduce the surface tension? Possible: when the temperature upwards from 20 ° to 80 ° C, the surface tension decreases from 73 to 62 erg / cm^3. That is not many. If sodium soap of oleic acid is added in 0.1%, the surface tension drops to 26.5 erg / cm^2. Therefore, the soap solution is well-spread on the oleophilic surface and is well-soaked into the fabric.

Substances that reduce the surface tension of the water are called surfactants, or agents that are capable of collecting on the adjacent surfaces of the interphases of the two substances are called surfactants. Aqueous solution of soap is surfactant. Removal of laundry (body, oil) from the surface of the fabric is as follows.

When soap is dissolved in the water, the carbohydrate groups (the cap) remain in the solution, and the hydrocarbon groups (the stick) are squeezed to the surface of the solution. If a droplet of oil or other non-polar substance drops into the soap solution, the stick of molecule is punctured into the fat. So soap connects water-insoluble oils to the solution, that is, by interacting water and fat around the oil droplet, forms a monomolecular layer on their surface. As solution contains plenty of soap molecules, they form an elastic curtain around the oil droplet. The same thing happens with solid substances (powder) that is washed away from the surface of the fabric. The soap solution has high moisten ability, so the soap spreades well on the surface of the fabric, which was put into the solution. There is, soap molecules, with their stick part, deposited in the fabric. Soap also clings to the dirt.

The polar portion of the soap molecule is dissolved in an aqueous solution as follows:

$$\mathbf{RCOONa \longrightarrow RCOO^{-} + Na^{+}}$$

Buning natijasida elektr maydoni hosil bo‘ladi. Xo‘llangan material va kir sirtining elektr zaryadi, bir xil va bir biridan itariladi. Shu tufayli kir, chirk materialdan ajraydi va eritmaga o‘tadi Xuddi shu zaryad kirning mato yuzasiga qayta cho‘kishiga va bir biri bilan birlashishiga to‘sqinlik qiladi

This results in formation of an electric field. The electric charge of the moistened fabric and the surface of the laundry is same and is pushed from each other. Due to this, the dirt separates from the fabric and push to the solution (Fig 13.4). The same charge prevents the dirt from falling back on the surface of the fabric and joining one another.

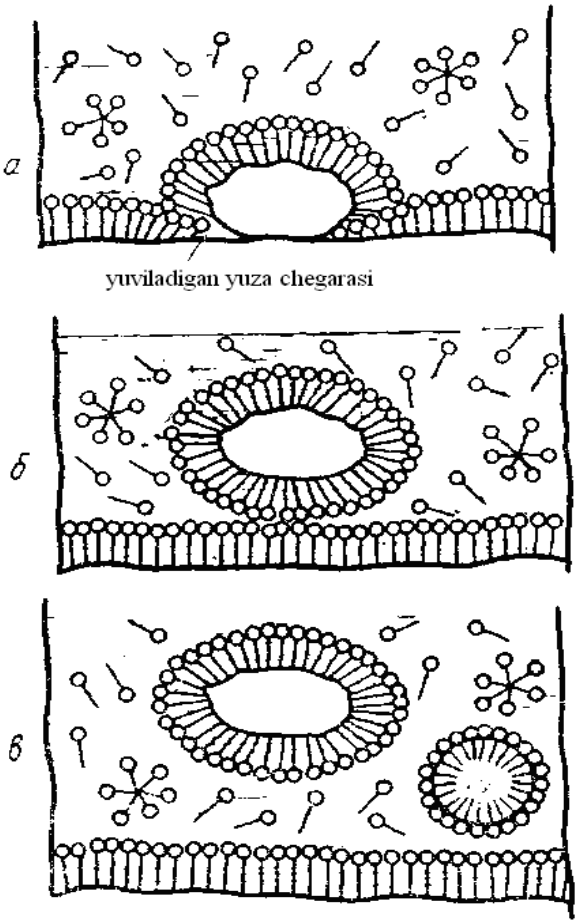

Figure 47. Scheme of detergent: a-first stage (wetting of fabric and dirt), b-second stage (disintegrationof dirt from fabric), v-third stage (dirt in the stain removal solution)

Test questions

1. What is the soap? The role of soap production
2. Physical and chemical properties of soaps.
3. Soap polymorphizm
4. Physical and chemical properties of soap solution.
5. Critical concentration of micelle product.
6. Solubility of soap.
7. Properties of electric conductivity of the soap
8. Hydrolysis of soap
9. Solubilization of soap
10. Surface activity of soap solution.

10- LECTURE

RAW MATERIALS AND AUXILIARY MATERIALS FOR THE PRODUCTION OF SOAP

Plan: Basics of soap making. Raw materials for the production of soap. Fatty raw materials and additives. Animal fats, tallow, vegetable oils, fatty acids, fatty waste and industrial oils. Requirements for fatty raw materials. Fat substitutes: synthetic fatty acids.

Oily raw material. The quality of soap depends on the quality of used oils. There is high requirements for raw materials which is used in aromatic soap. Raw materials, which are dark colored and with unpleasant smell, are used for household soap. Animal oils: sheep and cow oils are a significant raw material for soap, especially for perfume soap. Technical animal oils are used for household and perfume soaps. These oils are obtained by heating up the raw materials which contain oil. Coconut oil and palm kernel oils are used for aromatic soap. They contain up to 52% laurine and up to 19% of myric acid. These oils increase the elastisity of soap. According to structure of oil acid, palma oil close to animal fat and it is used for production of aromatic soap. Salomas – with high titer (46-48^{0}C) is used for household soap, with low titer (39-42 °C) is used for aromatic soap. Fatty acids, which obtained from soapstock are used in distilled form. Synthetic fatty acids are used instead of natural fatty acids in soap cooking. C_{10}-C_{16} fraction is used instead of coconut oil, C_{17}-C_{20} fraction is used instead of solid oil.

Deficiency of synthetic fatty acids:

The C_{10}-C_{16} fraction contains 4-5% of low molecular C_5-C_9 acids, that soaps of them do not foam and do not have the washing ability, besides aqueous solutions of these soaps, affect to the human skin and dry the skin.

C_{17}-C_{20} fractional synthetic fatty acids (RFA) contain 15-20% high molecular fatty acids (C_{25}), which are the soaps of them do not well soluble in water and have low washing ability. Therefore, synthetic fatty acids can not replace fully, the natural fatty acids in soap cooking. In order to obtain high quality soap synthetic fatty acids should contain mainly C_{12}-C_{16} and C_{17}-C_{18} fractional acids, and should be free from the above-mentioned compounds.

RFA is obtained by oxidizing of paraffin with oxygen, with participation of the catalyst. As a catalyst, 0.2% potassium permaganate or manganese oxides are used. During oxidation, the paraffin molecule is bonded to oxygen, bonds are cut off everywhere and formed two molecules of fatty acids.

$$\mathbf{CH_3 - (CH_2)_n - CH_2 - CH_2(CH_2)_m\, CH_3 + 5O_2 \longrightarrow}$$

paraffin

$$\mathbf{- CH_3\, (CH_2)_n\, COOH + CH_3\, (CH_2)_m\, COOH + H_2O}$$

o.a o.a

Oil substitutes (canifole, tal oil, oil acids) are used for the production of some household soaps.

Distilled fatty acids of soapstock are used for production of household and aromatic soap.

Additional materials. Sodium hydroxide (NaOH) or - caustic soda is brought to the plant in a solid form in the steel drums, in concentrated (92-96%) form or liquid (42-43%) form in the tank.

Sodium carbonate (Na_2CO_3) or calcined soda. It is brought in a solid form (91 - 96%).

Sodium chloride (NaCl) is the name of the product - food salt, it is brought in a solid form (92-98%).

Dyes - used to dye the aromatic soap. For this purpose water soluble and oil soluble dyes and pigments are used.

As a water-soluble aniline dye, it is used red rodamin $C_{18}H_{31}O_3H_2C1$; yellow-colored methanil ($C_{18}H_{14}O_8N_3Na$), red-blue fluuoreateous (with lemon), brown color ($C_{20}H_{10}O_5Na_2$). Water-soluble dyes are become partially colorless and dyed the soap foam. Therefore, later oil-soluble dyes (red J and S brands, yellow J brand) and water-soluble (yellow, blue, green, brown) dyes were offered. The dyes, in a form-aqueous solution with concentration of 0.5%, are added to the 1 t. soap in the amount of 10 - 270 g, depending on the type of soap.

In the production of white soap, it is added 2-10 kg of zinc or titanium belt, to 1 t. soap,to improve its color and increase its hardness.

Fragrant ingredients (aromatizers) are added to make a good smell. They are made as bouquets of a mixture of different fragrances, natural (essential oils) and synthetic ingredients. 1 kg of aromatic substances are added to 1 t.soap.

Oxidising agents - these are substances that prevent to spoiling and oxidation of soaps. As a result of the oxidation of unsaturated fatty acids, the smell and color of the soap change. As a antioxidant,it is used a sodium silicate (Na_2O n SiO_2) and citric acid.

The elastic substances (plastifiers) protects the soap from being brittle and ensures its plasticity and elasticity. Stabilizers - enhance the stability of fragrances and durability of soap bubbles.

There are antioxidant and soap plastifiers: the "Antal P-2" and "Plastibol-9": Antol P-2 - sodium carboxymethylcellulose, citric acid, methyl ester of oxybenzoic acid, polyethyleneglycol.

«Plastibol-9» - sodium salt of diethanolamine, boron, benzoic acid, oxybenzo and vinic acid.

Grease additives protect the skin from dehydration. For this purpose, lanolin - purified wool oil, spermatheca-animal glue, glycerin and others are used.

Disinfectant supplements enhance antiseptic properties of soaps. These include: gexochlorofen (hygienic soap), phenol (carbal soap), boric acid (baby soap).

Preventive therapies are used against skin disease. They include: chlorophyll carotene paste (Lesnoe soap), xna (Gayane), sulfur selene (Sulphali soap) with berestin (Degtergen soap).

Making recipes. The physical-chemical properties, cost, technology of preparation of soap is dependent on its oily raw material recipe. Therefore, making recipe is one of the most important stages of producing soap. When you set up a recipe, it is necessary to select such fats that the soap should be strong and elastic, with good solubility, low expending and with good washing ability.

Specific features of fatty acids, that are included in fatty raw materials are taken into account. The amount of fatty acids used in soap cooking depends on the type of soap, its use, and the stability of the smell, color, plasticity in storage.

The main physical and chemical parameters characterizing the properties of fatty acids (neutral fats), which are the raw materials for soap production, include:

- fatty acid titer, these indicator determines solidity of soap, plasticity and solubility of soap in water;
- neutralization number of fatty acids (saponification number of fat), the amount of alcali in soap cooking depends on this indicator;
- iodine number, an indicator of unsaturation level of fatty acids, indicates oxidation and further resistance;
- average molecular mass, washing ability of soap, electrolyte concentration in salting soap glue and so on.

The titer, which is the basic physical-chemical index of soap is calculated by the following formula:

$$T_{ar} = (T_1C_1 + T_2C_2 + \ldots\ldots\ldots T_pC_p) /100,$$

there is:

$T_1 ;T_{2\ldots\ldots} T_p$ – titers of the components in the oily mixture, ^{0}C;

$C_1;C_2\ldots..C_p$ – The amount of components in the oil mix, %.

The titer, which is calculated for any type of soap, must meet the standard requirements for this indicator.

Oily recipe of household soap. In our country a wide range of assortments of oil and oil substitutes, are used to produce soap. Including: fatty acids of high titer salomas from vegetable oils; C_{10}-C_{16} and C_{17}-C_{20} fractions of synthetic fatty acids; fatty acids extracted from soapstock, from refining vegetable oils and animal oils. Technical animal oils with dark and unpleasant smells, oil substitutes and oily wastes are used only in the case of improved quality.

The oily recipe of household soap is shown in Table 21.

Table 21

Recipe of the household soap

Raw materials	the amount of oil acids, %	
	72% soap	60 % soap
Salomas	38-60	22-46
animal fat	5-17	5-12
Soapstok O.A(oil acid)	0-7	23-25
R.O.A(raw oil acid)	12-40	16-48

The titer of oily mixture should be 35-42^{0}C.

Oily recipe of the perfume soap. Aromatic soap is different from household soap with availablity for use in warm and cold water. To do this, it should have good washing ability, to produce a stable foam and should not crack when drying. In order to meet these requirements, oils with oil-glue are added to oily content of aromatic soap. The main requirement, for making a recipe for an aromatic soap, is it should provide a good plastic condition after drying and mechanical treatment of soap. For example, the sodium palmitate provide plasticity, well solubility in water and homogeneousity, so animal oil, which contain up to 30% palmithin acid, is used in producing aromatic soap.

The oily recipe of classic high-grade aromatic soap, from the FIC(MDH) and foreign countries, contains 80-85% molten animal oil (fatty acid titer 41-43^0) and 15-20% coconut oil. It contains 20-22% of stearin, 23-25% palmithin, 11-15% myristine and laurine, 35-37% oleic acid, improves properties of finished product and its physical and chemical properties, as well as creates favourable conditions for mechanical treatment of soap. Such a recipe is used in the production of "Extra" and Group I soaps.

For the production of other groups of aromatic soap, classic recipe is used as an etalon, and according to it, fats and coconut oils are partly or completely replaced with other oils. Including low-titer salomas from vegetable oils (mainly cottonseed oil with 22-25% palmitic acid); I grade clear technical animal oils or fatty acids of distillated animal oils are used as an oily core. Hydrogenated pork oils are used (natural pork fat, which contains up to 8% linolic and a small amount of linoleic acid, is used in the amount of not more 15-20%). In the recipe of the II and III soaps coconut oil can be replaced by the C_{10}-C_{16} (C_{12}-C_{16}) fractions of R.O.A. Synthetic fatty acids are not included in the extra, I group, and kid's soap.

The oily recipe of the aromatic soap is given in Table 22.

Table 22

Recipe of the aromatic soap

Raw material	The amount of oil acids, %			
	I-group “Extra”	II-group	III-group	Kid’s soap
Animal fat	70-60	33-27	17-13	33-27
D.O.A (dist.oil. acid)	-	32-38	52-48	32-38
R.O.A(raw oil acid) C_{10}-C_{16}	-	16-10	14-16	-
Coconut oil	13-17	6-8	3-5	13-17

The titer of the oily mixture should be 31-41^{0}C.

Test questions

1. Raw materials for soap production
2. Additional materials
3. Formulation of soap recipe
4. Recipe of the household soap
5. Recipe for aromatic soup
6. Synthetic fatty acids (SFA) used in soap production
7. Oil substitutes. 8. Basic raw materials for household soap
9. Requirements for basic raw materials, used for aromatic soap
10. Flavoring substances and their quantities
11. Parameters of soap cooking process
12. Soap cooking methods

11- LECTURE
PREPARATION OF SOAP BASE FOR LAUNDRY AND PERFUMERY SOAPS

Plan: Preparing the soap base in a batch method. Scheme for preparing the basis of laundry soap on a periodic basis. Continuous preparation of a laundry soap base on TNB-2 equipment.

Equipment for making soap. Soap dish. Continuous saponification of fatty acids TNB-2, BShM, DON.

Key words and phrases

1Raw material; Additional materials; Oil assistants; Retseptura; Aromatic soap; Titer; Direct method; Indirect method; Soap absorption; Carbonated soap; Boiling; Caustic Soap; First salting; Second salting

Saponification of neutral oils. Saponification of neutral oils are made by alkalis (NaOH, KOH). Carbonated sodium does not saponificate neutral oils, under normal conditions.

There are two reactions in saponification of neutral oils. Initially, triglyceride is hydrolyzed, and glycerin and acid is formed, then fatty acids react with alcali, and soap and water are formed.

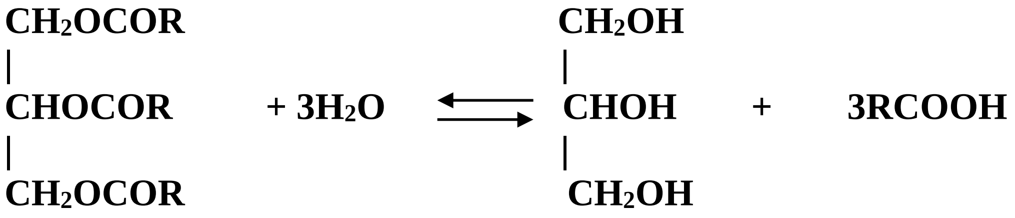

$$\begin{array}{l} \mathbf{CH_2OCOR} \\ | \\ \mathbf{CHOCOR} \\ | \\ \mathbf{CH_2OCOR} \end{array} \quad \mathbf{+\ 3H_2O} \quad \leftrightarrows \quad \begin{array}{l} \mathbf{CH_2OH} \\ | \\ \mathbf{CHOH} \\ | \\ \mathbf{CH_2OH} \end{array} \quad \mathbf{+} \quad \mathbf{3RCOOH}$$

$$\mathbf{RCOOH + NaOH} \leftrightarrows \mathbf{RCOONa + H_2O}$$

The saponification reaction goes slow, because the oils do not dissolve in alkaline water, so the emulsion dispersion affects to the reaction speed.

For example: saponification of animal oils with 35% NaOH at 45^0C, the effect of dispersion on rate of saponification is shown in Figure 48.

Increasing the dispersion of the emulsion increases the rate of saponification reaction 20-30 times. In the reaction medium, with increasing soap formation slowly, dissolution of the fat in the concentrated soap solution increases, the saponification accelerates, and the speed of reaction approaches to the reaction speed in the gomogenic medium.

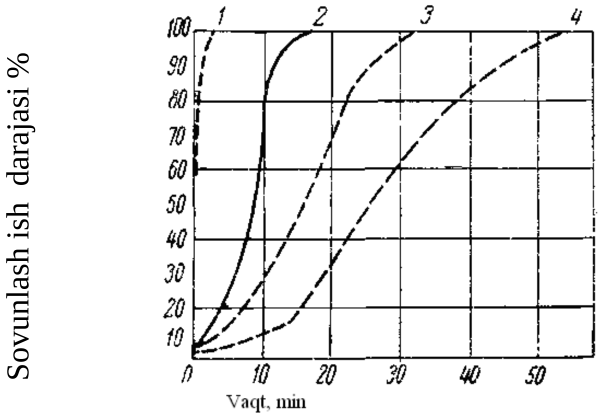

Picture 48. Change in the speed of saponification of fat, depending on the initial dispersion of the emulsion

.

1-Saponification of the emulsion, which is done in emulsifier; 2 - artificially obtained emulsion; 3 - saponification with turbomixer; 4 - manually mixing

So as to strengthen the connective surface, there is should be an emulsifier. As you can see from the curves in figure 49, saponification of oils are faster in the soap solution for several times.

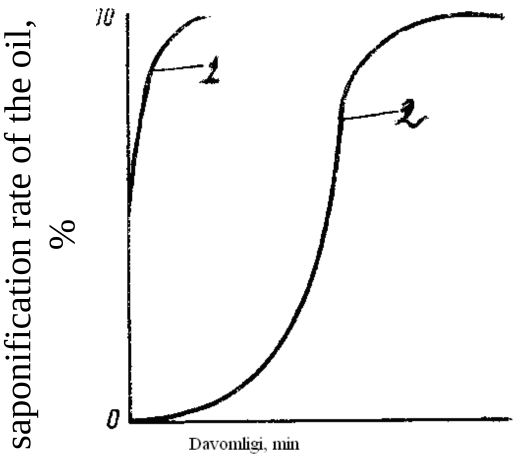

49 – rasm. The saponification speed of oils with alkali: 1. oil solution in 1-50% soap; 2. pure oils

The soap, which is formed or added at the beginning. accomplish the emulgator function.

The velosity of saponification accelerates very fast, when there is formed 20% or more soap.

Increasing the temperature increases the velosity of the reaction, but it leads to emulsion degradation. Therefore, the temperature at the beginning of the reaction should be 60-80 ^{0}C and rises up to 100-105 ^{0}C , with accumulation of the soap.

When the concentration of the alkaline solution increases, the velosity of the saponification increases. But concentrated solution leads to salting soap. Therefore, initially an alkaline solution with low concentration, then concentrated solution is used.

Neutralization of fatty acids. When cooking soap from fatty acids, they can be neutralized with carbonated alkaline. This is called carbonate saponification.

Carbonated saponification reaction

$$\mathbf{Na_2CO_3 + H_2O \rightleftarrows NaHCO_3 + NaOH}$$

Sodium bicarbonate

$$\mathbf{RCOOH + NaOH \rightleftarrows RCOONa + H_2O}$$

Decomposition of the sodium bicarbonate:

$$\mathbf{2NaHCO_3 \rightleftarrows Na_2CO_3 + CO_2 + H_2O}$$

Thus, when the fatty acid is neutralized with sodium carbonate, the fatty acid reacts with NaOH.

Neutralization of fatty acid with Na_2CO_3 should be carried out at a high temperature.

For the absence of sour soap, the amount of alkali, in carbonate saponification and caustic saponification, should be taken 0.1-0.3% more than theoretical.

If sour soap is formed, the mass of soap will appear, and it will be very difficult to crush it.

Calculate the amount of alkali content to saponificate oily compounds. Theoretically, the amount of NaOH needed to saponificate 1 t of fat mixture is calculated by the following formula.

$I_{NaOH} = 0{,}714$ S.s. or $I_{NaOH} = 0{,}714$ N.s.

here : S.s. – saponification number of oil mixture,

0,714 – Coefficient of recalculation of KON to NaOH

(40,0/56,1 = 0,714)

The carbonate soda, which is used for the saponification of fat in the production of soap from fatty acids, and the amount of NaOH taken to complete saponification is determined.

$I_{Na2SO3} = I_{NaOH} = 1{,}32 /100,$

here: K – carbonate saponification rate (70-80 %)

1,32– Coefficient of transition from NaOH to Na_2CO_3.

$I_{NaOH} = I_{NaOH} (100\text{-}k)/100$

$\frac{106\cdot 92}{2\cdot 40\cdot 95} = 1{,}32$ ie 1.32 kg Na_2CO_3 instead of 1 kg of NaOH.

106 - The molecular weight of Na_2CO_3

40 - The molecular weight of NaOH
92 - The amount of caustic soda NaOH
95 - The amount of sodium in Na_2CO_3
2 - The number of sodium atoms in Na_2CO_3

The amount of NaOH that has been used:

$$\mathbf{I_{NaOH} = I_{NaOH}\,(100\text{-}k)/100}$$

It is also necessary to take into account the free-alkali that remain in the soap. Usually, there is (0.2-0.3%) alkali in ready-made soap.

Determination of the amount of non-aqueous soap.

Soap formation reactions:

$RCOOH + NaOH === RCOONa + H_2O$

Then the formation of non-aqueous soap is determined as follows:

$G_C = RCOOH + Na – N$

Or G_C is calculated in % to weight of used fatty acids.

$$G_C = \frac{(M_{ё.к.} + M_к - 1)\cdot 100}{M_{ё.к.}}$$

here: $M_{ё.k.}$ - average molecular weight of fatty acids; M_k is the molecular weight of the alkali metal, 1- atomic mass of hydrogen.

Example: if $M_{ё.k.} = 270$

$$G_C = \frac{(270+23-1)}{270} = 108{,}1\%$$

and the amount of pure soap in the soup product (70%):

$$G_C = \frac{70\cdot 108{,}1}{100} = 75{,}6\%$$

Moisture of the soap is determined by the following formula:

$$\mathbf{W = 100 – (G_C + I_{Er} + Q + A)\ \%}$$

I_E – free alkali content in soap, %
Q – additional substances to the soap, %
A – quantity of different compounds, %

For example: W= 100 – (75,6+0,3+1+1) = 22,1 % .

Soap cooking methods. Soap cooking is done in a variety of ways, depending on the raw materials, soap types and quality of the products being manufactured. They are direct and indirect main techniques.

The direct method is based on the neutralization of oily mixtures with the corresponding soda products and obtaining soap glue.

The resulting soap glue should be consistent with the technical specifications for the concentration of fatty acids and the amount of electrolytes. Cooked soap, with that way, is dispensed for further processing without additional processes. The direct method is widely used in cooking household soap from well-refined oily raw materials. When the soap glue, which is cooked with direct method, treated with electrolyte solution, soap mass is separated into two phases (core and undersoap alkali or core and undersoap glue). The method, which goes by separating into three phases (core, undersoap glue and undersoap alkali), is called indirect method. Soaps, which contain 60-63% fatty acids, and obtained by salting soap core, are cooled, dried and mechanically processed, as a soap, which is cooked with direct method.

When it is cooked household soap from oily raw materials with various pollutants, soapstocks, technical animal oils in a dark color, neutral oils; when producing all kinds of aromatic soap from fatty acids and neutral fats, there are used indirect method.

Test questions

1. Soap cooking methods
2. Preparation of the basic of the household soap.
3. Treatment of undersoap glue.
4. Treatment of undersoap alkali.
5. Preparation of a base for aromatic soap.
6. Saponification of neutral oils
7. Neutralization of fatty acids
8. Technological scheme of preparation of household soap base with continuous method.
9. Preparation of aromatic soap base from neutral oils
10. Preparation of aromatic soap base from fatty acids.

12-LECTURE
SOAP PRODUCTION AND SHAPING

Plan: Cool and dry the soap. Vacuum drying chamber for drying soap. Vacuum auger press. Technological scheme and description of processing based on laundry soap. Two-stage screw press. Process flow diagram for processing perfumery soap based on continuous lines. Perfume soap processing scheme on the Massoni line. Indicators of the quality of laundry and perfumed soap. Soap cooling, crystallization and drying machines. Vacuum drying device. Equipment for shaping and mechanical processing of soap products. Screw press. Soap cutting machines. General information about the equipment of perfumery soap.

Key words and phrases

Soap glue; Soapstock core; Carbonate mass; Undersoap alkali; First saponification; Second saponification; Second salting; Third salting

Preparation of household soap bases. Soap cooking on a periodic method. This method is carried out in boilers with capacity up to 200 m^3.

Preparation of the base of household soap from hydrogenated oils and oil-substitute raw materials is carried out on direct or indirect method, in the periodic operating devices. Neutralizing the fatty acids of fatty mixtures are carried out in a clean boiler with a high quality soapstock core or a residue of soap, which has left in the boiler.

Soap cooking boiler (Fig. 50) consists of a cylindrical body (1), a conical basement and a lid. There is a absorbing branch pipe (5) in the lid of the boiler to emit resulting CO_2 and the open-air vapor into the atmosphere. There are cylindrical sprayers (3 and 4) Under the lid, fatty acids, oils, alkaline solution, salt solution and hot water are fed into the boiler. The view window (6) serves to observe soap cooking (sometimes to put salt). Defecated soap cores are poured out through a siphon tray (7),which connected to the pumps. The hinged pipe is driven by the chain and the lever (2). Zmeevik (8) is installed to heat the soap core. The bottom of the boiler has a seal (9) for releasing undersoap alkali and undersoap glue.

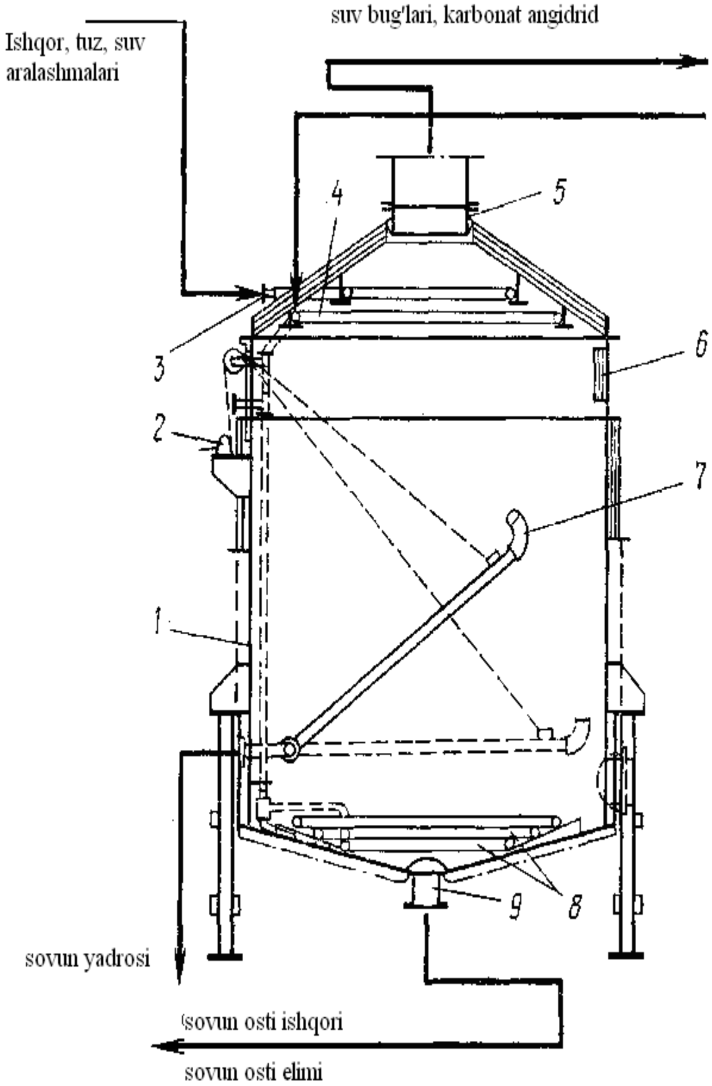

Figure 50. Soap cooking pot

Scheme of preparation of household soap on a periodic method (Fig. 51). Sodium carbonate and caustic soda solutions, salt and water from measurers (1,3,4 and 7) fall into boilers (8,9 and 10). These solutions are prepared in tanks(24, 21 and 18) and transported to respective receptors by means of pumps (23, 20 and 19). Fatty acids, synthetic and naphthenic acids are deposited in the reservoirs (2, 5, 6) and flow into soap cooking pot. Canifol and fatty acids mixture is prepared in the mixer (15) and sent to the boiler with pump(16). In the cooking boilers (8) and (9), it is improved the quality of oily wastes. The clear core is pumped into the soap cooking pot (10) by means of pump(14) from these pans. The undersoap glue and undersoap alkali are transferred from one of the boilers(8 or 9) with the pump(12). Undersoap glue in the main boiler is supplied to the boiler (8 and 9) with this pump (10) for the recycling. The undersoap alkali in the boiler (8 and 9) falls into the reservoir(13), where it is is dispensed for further treatment, after separating the soap.

Carbonated saponification of oils, synthetic and petroleum acids and full caustic saponification is perfomed in the empty boiler (10) or in the boilers (9 and 10) with cleaned core (9 and 10). The ready soap base from the boilers (9 and 10) is supplied to the soap collector(11), through the filter (17), it is pumped for cooling, drying and mechanical treatment with the pump(22).

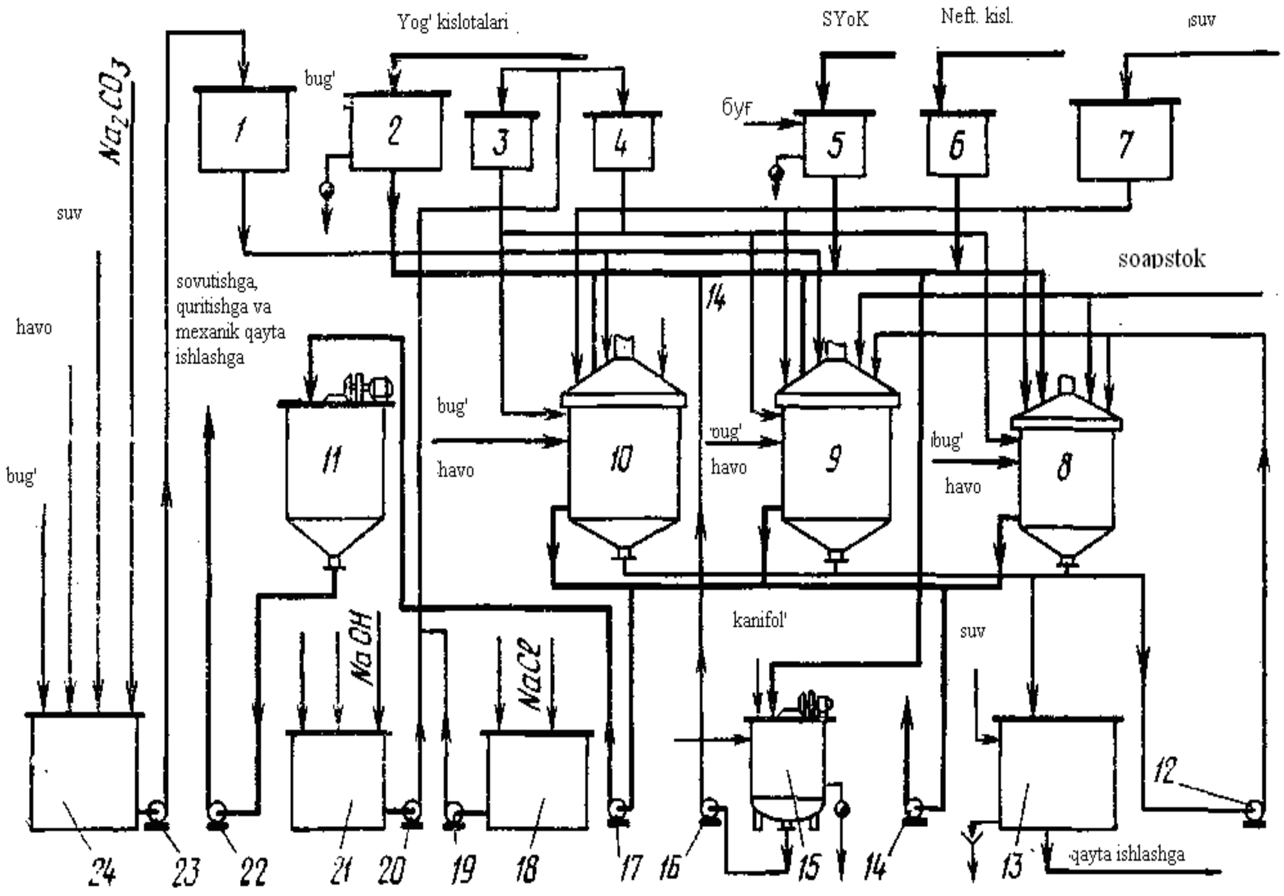

Figure 51. Technological scheme of preparation of household soap base on a periodic method

There are sequential two-stage processes in direct method of soap cooking: carbonate saponification with sodium carbonate (Na_2CO_3) and alkaline saponification of neutral oil with alkali solution (NaOH) (full caustic saponification). The calculated amount of sodium carbonate solution, with a concentration of 28-30%, is inserted into the boiler, heated with open steam until boiling temperature, and then first boiling natural fatty acids and oil substitutes, and then synthetic fatty acids are given in carbonated saponification.

As a result of large quantities of carbon dioxide, the acids are given by gradually mixing in order to prevent the soap from shedding. In the opposite order, that is, firstly, the fatty acids and then the soda solution can not be added to the pot. In this case, the sour soap can form. As the fatty acid neutralization reaction is accompanied by heat dissipation, the reaction mass is heated only at the beginning of the process. In order to mix soap and easy separation of carbon dioxide, a steam or compressed air is periodically supplied to the boiler. After the fatty mixes have been given, a very small amount of steam is added to the mass for a long time so that the SO_2 is completely separated. After the steam supply has been stopped, the volume does not change and the bubbles does not come out on the surface, this means that carbonated saponification is finished. Carbonated saponification is considered to be complete when the content of Na_2CO_3 in the mass is not more than 0.5%. In the case of high amount of sodium carbonate concentrations, fatty acids are added to the mass (boiler) or extra boiled. Fatty acids in carbonated mass should be 67-70%.

After the completion of carbonated saponification, for complete saponification, solution of sodium hydroxide (NaOH) with 40-42% concentration is added in a small amount, and by boiling the mass, and by mixing with steam. In order to prevent the formation of sour soap during the saponification process, excess amount of alkali should be in the mass. At the end of the procedure, the amount of alkaline content should not exceed 0.1-0.2%. In the full saponification primarily neutralizes the fatty acids in the kettle (as well as sour soaps and sodium bicarbonates, if any), then neutral fat is saponificated. After boiling the soap mass for 30 minutes, the amount of free alkali does not change, this is the end of caustic saponification. The soap glue, which is cooked with this method, is fluid, in the same content, has a clear appearance in the thin layer, the fatty acid content is not less than 60%, the amount of sodium is not more than 0.2% and free sodium carbonate should not exceed 1%. It is delivered to the tank for soap and dispatched for cooling, drying, and for mechanical processing.

There are high requirements for odour and colour of the finished product, which is obtained with indirect soap cooking method.

Technological processes of industrial soap cooking with indirect method consist of a sequence of operations:

when used pure oily material, saponification partial salinization of soap glue, by separating it to core and undersoap glue;

when used untreated oily raw materials, saponification, full salination of soap glue by separating it to core and undersoap alkali, flattening. The saponification process can be carried out with direct method, this means that, initially carbonated saponification, then obtained soap glue by caustic saponification. The amount of fatty acids present as a soap in the soap glue is not less than 52%.

Partial salting of soap glue is carried out with electrolyte (salt or solution of caustic soda). For this purpose, calculated amount of electrolyte is added (20% solution of salt) to the boiling soap glue, by mixing them. When each portion of electrolyte serves, the soap mass is well mixed and boiled until the electrolyte is fully dissolved.

The concentration of electrolyte, which allows the system to be separated to the core and undersoap glue, is determined by the recipe of fatty mixture and the concentration of fatty acids. The normal concentrations of electrolyte used for cooking with partially salting of soap in the usual oil recipe are shown below.

Table 23

The amount of oil acids in soap mass, %	Electrolyte concentration in soap mass (NaCl and NaOH total), %
52-54	not more 1,3
54-56	not more 1,0
56-58	not more 0,8

At the completion of the salinity, the amount of NaOH should not exceed 0.3%.

In the case of right partial salting, the mass of soap in the pot boils smoothly, plates with the width of 20-25 cm in its surface visible. It flows in thin layer through the stainless steel spatula, where the upper part of the spatula is dry and the bottom is covered with a thin layer of soap in clear appearance.

After partial salting of the soap mass is completed, it is defecated for several hours until it is divided into two phases. These phases consist of a soap core with 60-63% fatty acids (ready-made soap base) and undersoap glue with 25-30% fatty acids. Defecation time depends on the fat content, concentration and volume of the boiler. For example, in boilers with a capacity of $50m^3$, the defecation time is 20-30 hours. The ratio of the forming base (core) and undersoap glue is 65-70% and 35-30%. When used untreated oily raw material, the ready-made soap base, containing more than 0.2% of free alkaline and not more than 1% sodium carbonate, is dispatched to the soap-collector and to cooling, then to drying and to the mechanical processing. Undersoap glue is supplied to the boiler by means of the bottom choke and processed for cleaning purposes.

When used untreated oils and soapstock core for soap cooking, the undersoap glue is fully salted with electrolyte solution. To do this, 20% solution of salt is added to the undersoap glue, by boiling with open steam and stirring it. If the clear drops of the core is seen among the clear sample of the solution(undersoap alkaline), which is taken with spoon, complete salinization is considered to have ended. When the salting process is completed, the soap mass is defecated (2-4 hours in the boiler with a capacity of $50m^3$), there form two different phases (core and undersoap alkaline). Undersoap alkali is dispatched to the special tank for the final treatment, while the core is polished to improve the quality of the product, reduce electrolyte content and improve colour. At the polishing process, initially water is added to the core, then it is converted to the soap glue by boiling it with open steam. Soap glue, which contains 50-55% fatty acids, is partially salted and the system is again subdivided into the core and undersoap glue.

Processing of undersoap glue. Undersoap glue contain up to 30% fatty acids as soaps, up to 1% of free alkaline, various electrolytes (sodium carbonate, salt), as well as accompanying substances and compounds. These substances have passed from oily compounds and other materials.

Undersoap glue is processed to improve its quality before use for cooking soap. This processes are to neutralize the free alkaline in the undersoap glue and to salt the resulting soap mass with the salt. Neutralization of free alkaline and sodium carbonate is implemented by adding fatty acids by boiling intensively. The amount of alkali in soap should not exceed 0.05%. The resulting soap solution is salted with adding dry salt, by boiling. After two hours of defecation, the undersoap alkali is separated and processing is continued. The cleaned soap core is dispensed for the next soap cooking. To further improve the efficacy of cleansing, the kernel is dissolved with water until it becomes soap glue, and the salting process is repeated.

Processing of undersoap glue. Undersoap alkali, which is obtained in the processing of household soap with indirect method, as well as which is obtained in the processing of undersoap glue and other fatty wastes, contains 8-9% sodium chloride, 0.1% free sodium hydroxide and up to 0.8% soap fatty acids. The purpose of the processing of undersoap alkali is to reduce the loss of caustic soda and fatty acids. The purpose of soap processing is to reduce the loss of caustic soda and fatty acids. It is cooled to 50^0C to separate soap from the undersoap alkaline, which adhesed in it. The saponificated fatty acids are separated from alkaline up to 50%.

Undersoap alkali is processed with lubrication method to further reduce the amount of fatty acids and to extract soda products. To do this, the penatrate and carbonate alkali, which is contained in the undersoap alkali, are neutralized with fatty acids. There is, the fatty acids are taken in the excess amount by 15-20%, than calculated. Under these conditions, hardly soluble sour soap forms, which can be separated from the undersoap alkali by some method. Technical oils, fatty acids of soapstock or C_{10}-C_{20} fractions of synthetic fatty acids are used to neutralize undersoap alkali. The process is carried out with continuous mixing at 80-85^0C, and by defecation for 3-4 hours. The sour soap floated to the top of the boiler is collected and the dispensed to the main soap cooking, and undersoap alkali is released (sold to the construction company) or dispatched to the enterprise cleaning system by the oil holder.

The expenditure of fatty acids, which are used in neutralization is 100 - 130 kg to 1 t. soap.

The TNB-2 apparatus (Figure 52) consists of four horizontal drum (3) and a steam jacket (11) which is placed in it, and a ribbon spiral mixer. The mixing actuates from the electric motor (1) via the reductor (2). The steam bubbler (10) is mounted in the lower part of the drum to mix and to accelerate the release of CO_2 gas. All drums are attached with branch-pipes. The sprayer is fitted to the vertical branch-pipe(13), which is maintained for entering the alkaline solution, which joint the drum (2) and drum(3).

On the first drum, it is mounted a cylindrical reactor mixer (8) with a turbine blender cup(7) in it. This mixer is actuated by the electric motor (5) through the reducer(6). At the bottom of the cup, there are set branch-pipes to enter fatty acids and sodium carbonate solution. The carbonate mass formed from the mixture of fatty acids and sodium carbonate rises upwards and falls into the first drum through the gap between the cylinder wall and the cup. The first and second drum is equipped with a gas collector (4) which collects carbon dioxide formed during the carbonate saponification process. Measuring of the level, releasing of the soap is implemented by hydroshutter(12) in the third and fourth drum. Productivity of the TNB-2 apparatus is 7-10 t / h.

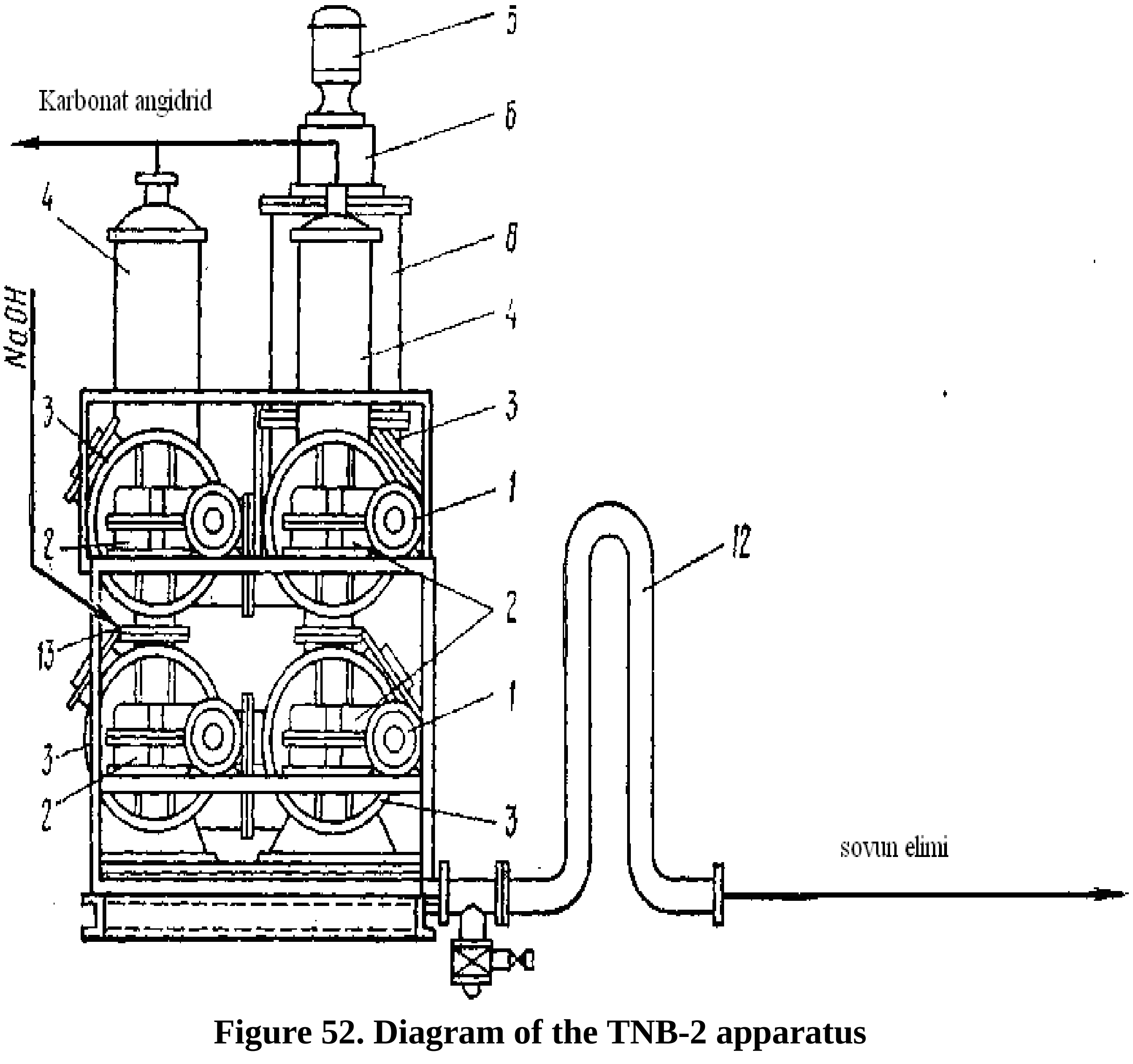

Figure 52. Diagram of the TNB-2 apparatus

It also uses “BSHM” and “DON” devices for continuous cooking of the soap base. The “BSHM” apparatus consists of a two-stage mixer, gas separator and a complete saponificating device. Carbonated saponification emanated in the two-stage mixer.

Technical and economic indicators of equipment for continuous cooking of soap with direct method are shown in the Table 24.

Table 24.

Indicators of continuous working apparatus (operation)

Name of the equipment	Capasity, t/hour	Steam consumption kg/t	Electricity consumption kVth/t	Space occupied, m^2
TNB-2	7-10	190	7	90
BShM	7-10	180	4	85
DON	7-10	160	3	70

The TNB-2 is distinguished by its stable technological indicators.

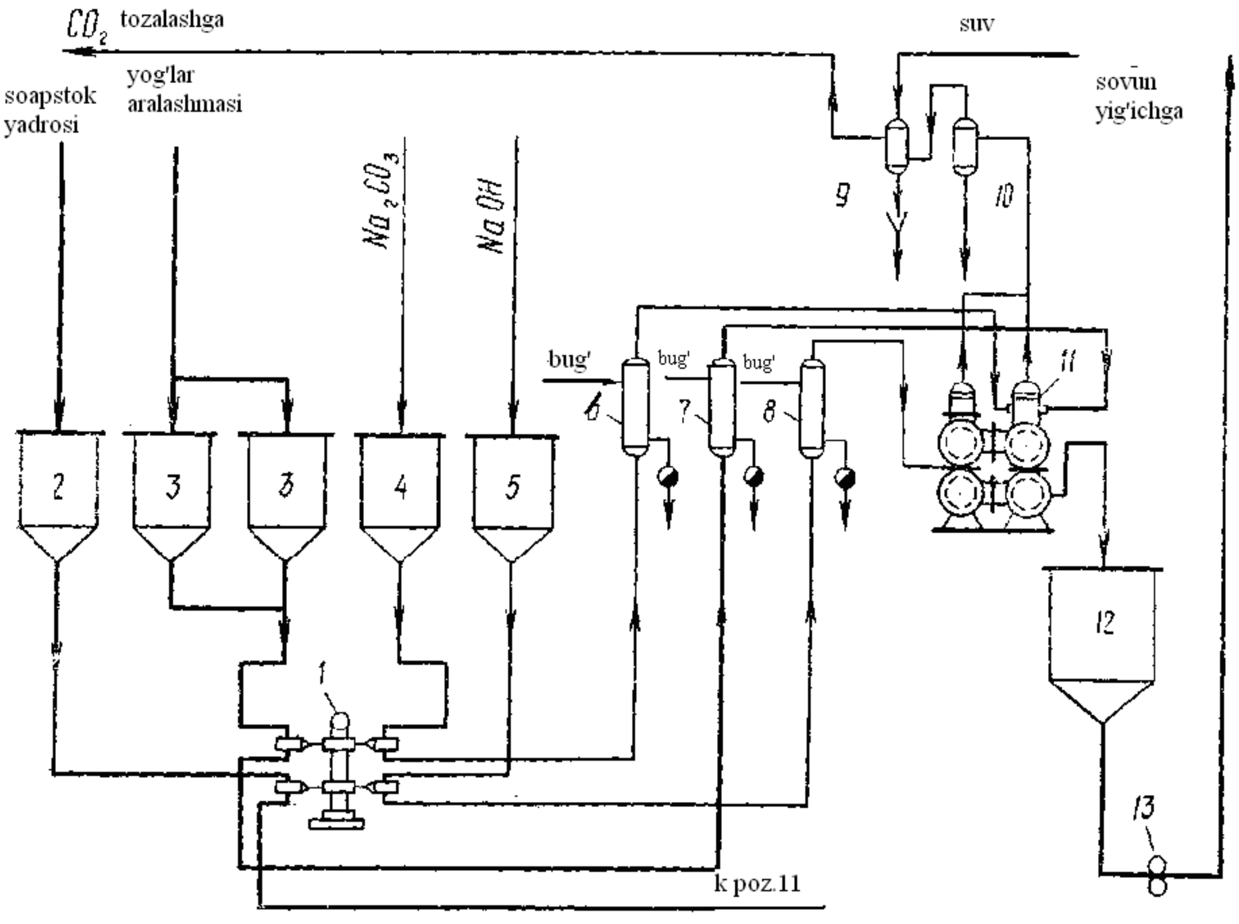

Figure 53. Scheme of preparation of household soap base, with continuous method in the TNB-2 device.

Continuous method of producing household soap base (Figure 53). Continuous cooking of the soap base reduces the duration of the cooking process up to 10 times, the steam consumption, the production area. Preparation of soap base in TNB-2 is carried out as follows.

The oily compound is dispatched to the pipe heat exchanger (7) through measuring pump(1) from the composite container(2,3), which is working in sequence. It is heated up to 104-115 °C and then transferred to the mixer(11) of the TNB-2. 27-30% solution of Na_2CO_3, which is heated up to 95^0C, is pumped via the pump (1) from the container (4) to the heater(6).

The carbonaceous saponification of the oily mixture occurs in the mixer. Carbonated saponification is completed in the first drum of the TNB-2. The carbonate mass is blended with mixer and blown with sharp vapour. The CO_2 is released intensively and dispatched to the cooler(9) from the gas collector(10) of the first drum, through foam holder. Then it is sent to the carbon acid shop for cleaning and gas compression.

The carbonate mass falls into the second drum. CO_2 is completely separated when stirring and providing sharp steam. The CO_2 is dispensed to the cooler, from the gas collector(10) of the second drum (2) through foam holder (9).

The carbonate mass from the second drum enters the third low saponification drum through the steep tube. Here it is irrigated with 39-42% of NaOH solution. To this end, the sodium hydroxide solution (5), which is heated up to 90-95 ^{0}C in the heater (1) sent to the apparatus, from pot (1), with the pump(8).

When mixed in the third drum, the carbonate mass is thoroughly saponificated and the resulting mass of soap falls into the fourth drum and then it may mix again and blow with a sharp vapour.

If the soapstock core is present, it can be fed to the third or fourth drum using the pump-measurer(1) from tank(2).

The soap glue falls into the correction boiler out of the fourth drum through the hydroshutter(12). The soap's quality is corrected with adding NaOH or fatty acids and by heating and mixing with steam.

The composition of soap mass as follows: the amount of fatty acids is not less than 60% of, the amount of free alkali is not more than 0.2%, and Na_2CO_3 should not exceed than 1%. The soap mass is dispensed to the soap collectors and then dispatched to cooling, drying and mechanical treatment.

Test questions

1. How many methods of soap cooking process?
2. Talk about soap cooking on a periodic method.
3. Talk about the production of household soap in a continuous method.
4. How to prepare a base for aromatic soap.
5. The structure and operation of the TNB-2 device.
6. Soap cooking with indirect method.

MECHANICAL TREATMENT OF SOAP BASES

Plan: Cooling and drying of soap. Vacuum drying chamber for soap drying. Vacuum shnekpress. Technological scheme and description of household soap processing.

To give the shape of commodity to the soap, which is prepared with direct or indirect methods, in the soap cookware or continuous working devices, soap base is processed according to the type and grade of the soap.

The household soap is cooled, dried, mechanically treated, molded, divided into pieces, stamped and ready soap pieces are placed in the boxes.

After cooling, drying and mechanically processing, it is added aromatic substances, dyes, antioxidants and other additives to the aromatic soap. Then, soap is additional mechanical treated, formed, cut, to the soap, cut, ready pieces are dried, stamped, wrapped in paper and placed.

Cooling and drying of soap. During the cooling process, the soap is crystallized and passes from liquid to solid state. The hardness of soap is dependent on the amount of fatty acids in it, the cooling method of it, fat titer of the fat mixture.

Soap can be dried in two ways:

Due to decreasing of the temperature, without changing the concentration of fatty acids (eg, "mechanical-modern"), increasing concentration of fatty acids, due to evaporation of humidity, this method is preferable. Drying is carried out to increase the concentration of fatty acids. Cooling and drying is combined in modern equipments. The meaning of the method is that, the heated soap is dried by sprinkling in the vacuum chamber and cooled. The optimum performance condition of the vacuum drying chamber can be determined using the nomogram (Fig. 54).

Depending on the concentration of fatty acid in the soap, a point is drawn to the right of the horizontal axis, vertical line is drawn from it until the intersection with a curve line, and a straight line from the cross-section to the left. Then a dot is drawn on the left side of the horizontal axis, which matches to the residual pressure in the vacuum chamber, and from this point the straight line is drawn with the horizontal line above.

The found dot shows the pressure of saturated vapor, which provides the amount of fatty acids in ready-made soap,which comes to the heat changer, to get soap, which contains the necessary amount of fatty acid.

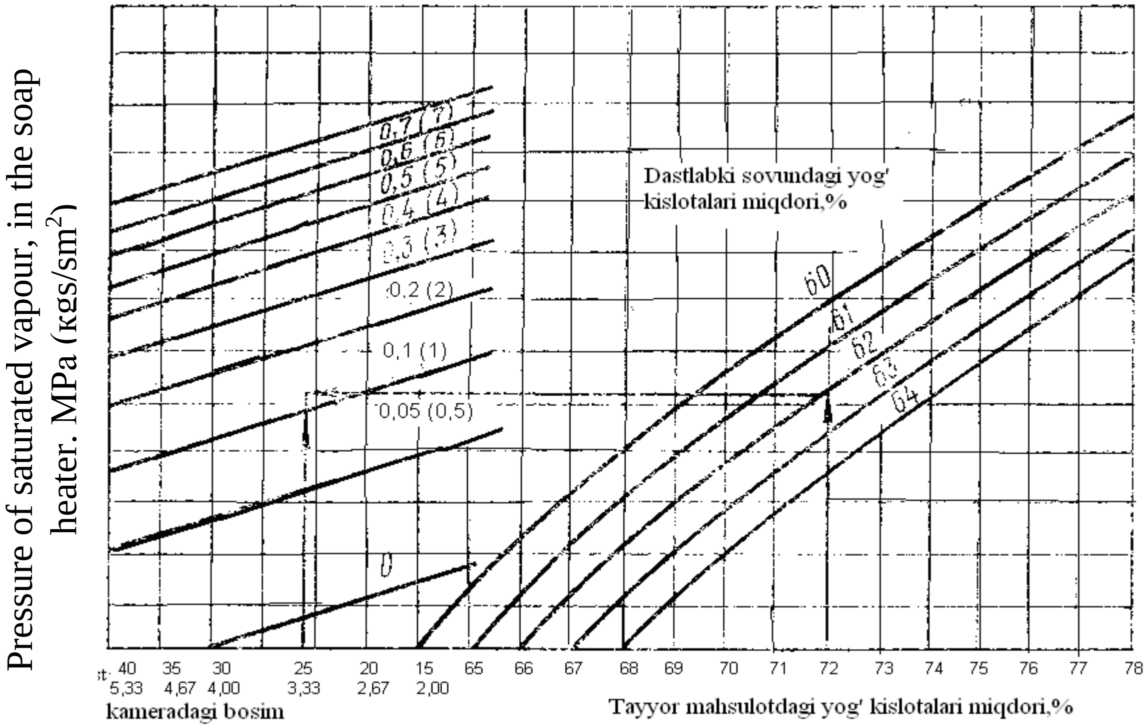

Figure 54. The nomogram of determining of soap drying conditions

A vacuum-dryer chamber for soap drying (Fig. 55) is a cylindrical apparatus of 1500mm in diameter and 4000mm in height, comprising the spherical lid (3), the cone (7), and the gripping ring (8). The shaft (4) is went through the centre of the camera, it is moved by electric motor through reducer. There are two nozzle(2) to sprinkle hot soap, as well as three types of steel blades for extermination of soap from lid, bottom and inner wall of the camera, which are placed on shaft with rotation frequency of 12.4 rotation per minute. Distance between walls and blades is not more than 0.1 mm.

There is steam jacket (6) in the cylindrical portion of the camera, it is suplied with a hot water at 60 to 98^{0}C temperature for preparation of high concentration soap.

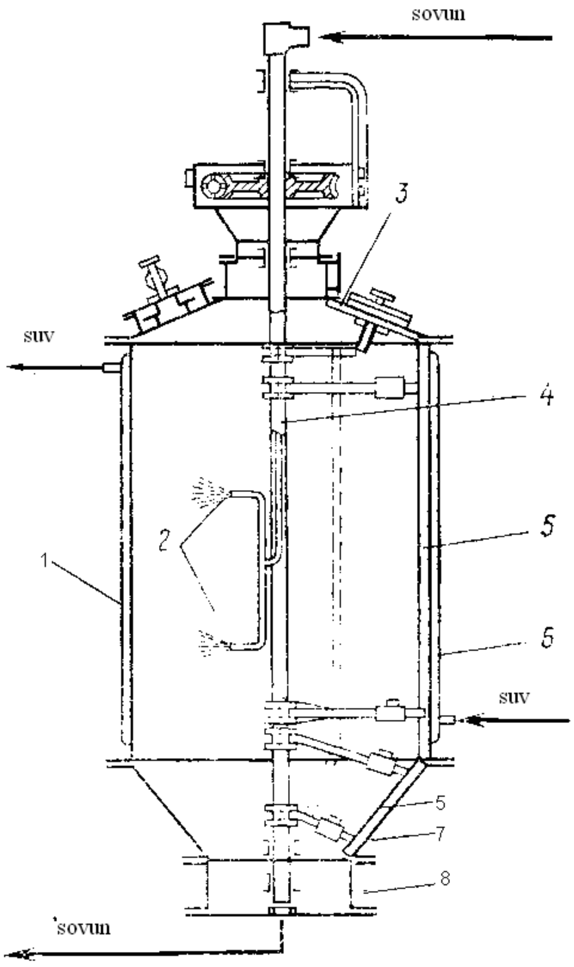

Figure 55. Vacuum drying chamber

Vacuum tape press (Fig. 56) is designed for mechanical treatment, plastification, pressing and stamping of soap. The main part of the cylinder is the screw, it is made from cast iron (cho'yan) and has two screw(5) which rotate facing each other. The step of bundles of screws ranges from 200 to 140 mm, with a diameter of 250 mm and a length of 1270 mm.

The screws are located on the press chamber (6), which is mounted on the stanina(1). Clippings(qirindi) fall into the screw-press from loading hole(7), which is connected to the bunker of the vacuum-drying chamber. When the screws turn, the soap clippings move towards the cone head (2) of the screw. Due to the changeable step of the screw bundles, and the resistance of the fence(3) to the action of the material, the soap clippings are condensed slowly. The condensed mass is rubbed, when it is conducted through holes of fence with diameter 20mm, then passed to the cone head (2), where it is pressed, tightened, and squeezed out of the screw-press in a shape four-sided brus. The head of the machine is equipped with a four-pointed satchel, which gives the desired shape of the soap bar.

To prevent excessive heating of soap mass, the press chamber is provided with a jacket (4) with cold water of 12 to 15^{0}C. To make a smooth, glossy, and smooth surface of the soap bar, the conical head of the screw has a hot water jacket. The temperature of the hot water varies from 30 to 90 ^{0}C and is controlled using an automatic thermostat. The productivity of the screw-press is 1 t / h.

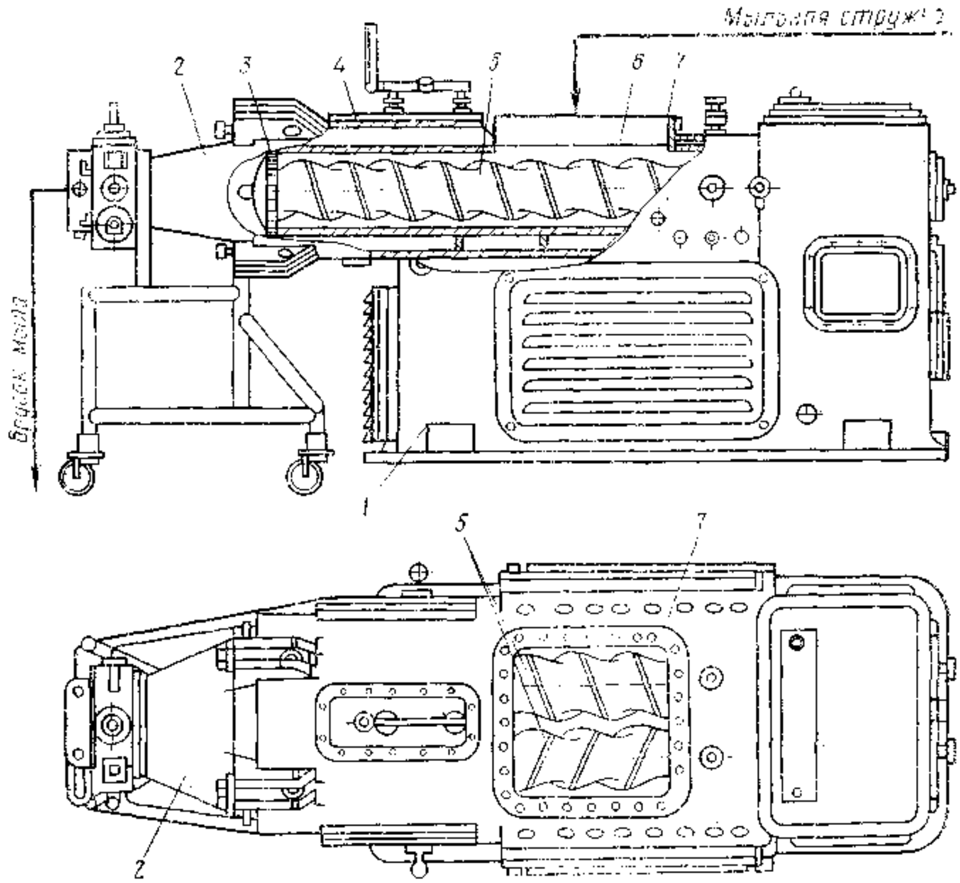

Figure 56. Vacuum screw-press

Technological scheme of household soap processing (Fig. 57). The base of the household soap, which is prepared with periodic(indirect or indirect) or continuous method, is provided to the heat exchanger column(4) from providing tank(1) via controlling pump(3) under pressure of 0.3 MPa, through the filter (2). Here it is heated from 80-90^{0}C to 120-140^{0}C. Then the hot soap is transferred to the vacuum dryer(5). Here, the soap is sprinkled with two sprayers, which are mounted on a valve in a vacuum drier. Soap cools quickly by losing some moisture and dries partially. The soap, which is attached in a thin layer on the walls of the camera, is eliminated using the knives installed in the valve.

The soap clippings(6) are distributed between the two vacuum screw-press(7) in the two sleeve bunker. Soap is plastificated in the screw-press, pressed to form dense mass, and soap passes through the stamp-cut automatic machine in a four-sided brus shape(8). There is put a necessary mark-stamp on soap surface with rotating valves. Then it cut into pieces. Ready soap falls into a pistol(9), it is pucked up into the wooden boxes and sent to warehouse by carrier(10).

The water vapour from the vacuum chamber is separated from the main part of the soap powder in the cyclone separator(11). It is is released by screw-press(12). Then, the water vapour is cleaned from the residue of soap powder in the second cyclone(13) and sent to the barometric condenser (15) via the vapour-ejector. There is a cap (16) from the tank. The water, which come from barometric condenser(15) flows through the pipe to the barometric well, which is sent to the cleaning system.

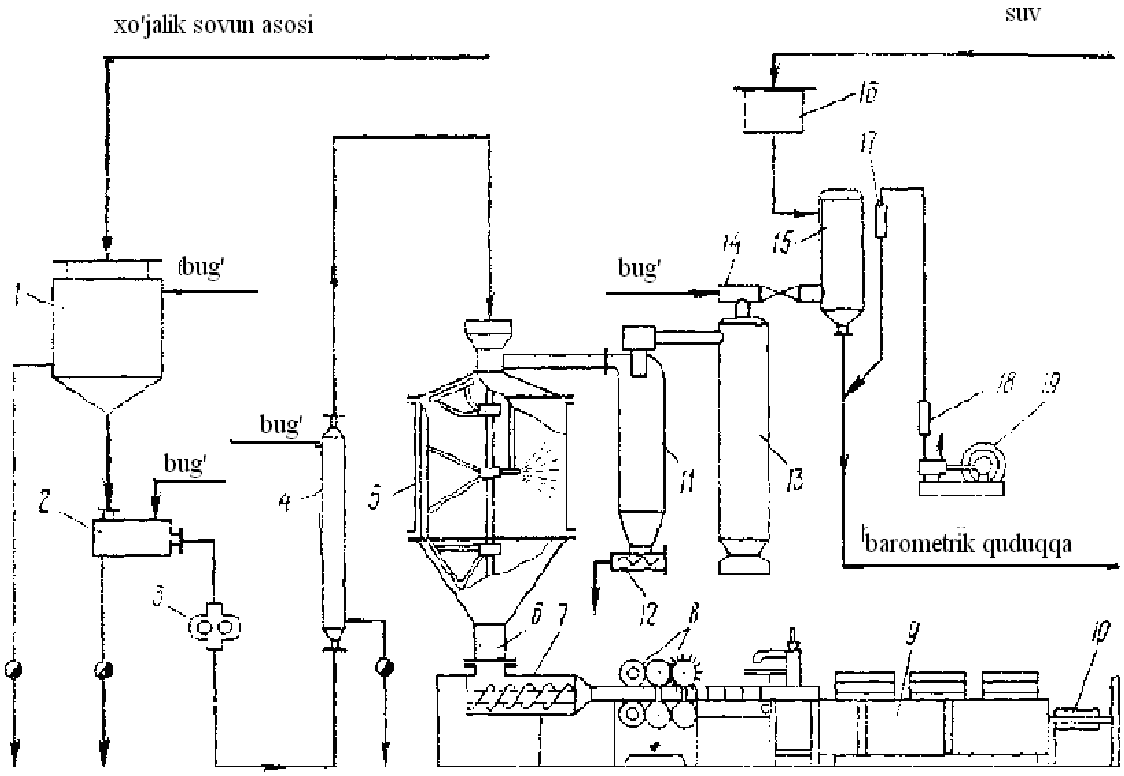

Figure 57. Technological scheme of treatment of household soap bases

Non condensed steam and gases are sucked off by vacuum-pump(19) through droplet separator(17) and the holder(18). When the cooling water of the vacuum pump at 20^0C, it provides a residual pressure of 2-4 kPa (15-20 mm mercury column) in device. It is enough to produce soap with 7-8% fatty acids. Vacuum drying chamber productivity is 2t / hr for household soap.

PROCESSING OF PERFUME SOAP BASES

Plan: Two-stage vacuum screw-press. Technological scheme of processing of aromatic soap base on ELM line. Scheme of processing of soap base on "Matssoni" line. Quality indicators of household and aromatic soap.

Key words and phrases

1.Cooling 2. Drying 3. Vacuum-camera 4. Soap packaging 5. Coloring substances 6. Smelling agents 7. Stabilizers 8. Salting 9. Soap absorption
10. Boiling 11. Washing, grinding

Perfume soap processing. Perfume soap is processed using vacuum-drying cameras. Cooling and drying of aromatic soap is carried out using a series of screw machines, which work in sequence, to process mechanically under vacuum, such as household soap. It is used the ELM line, with productivity of 2 t / h, in our plants. Some plants also have Matssoni line, with a capacity of 4 t / h.

Two-stage vacuum ssrew-press (Fig. 58) is intended for complete mechanical processing of aromatic soap. It consists of two same screw-presses, which are horizontally positioned at different heights, which work in sequence. The screw-presses are connected to one unit by a vacumm camera. The screw(5) of the top press iz moved from the electric motor(1) via the gear wheel system (3) and the strap extension (2). The diameter of the screw is 300mm, the rotation speed is 12 rot / min. The body of the screw is cooled by circulating water in the shirt (6). The soap, which come to the upper screw-press, through the supply bunker(4) is thoroughly mixed, tightened, pressed, passed through the grid and is got granula by cutting with knife. The soap falls into a vacuum camera(7) with residual pressure 5.3-8 kPa (40-60 mm mercury column) from top screw-press. Here, the soap mass is partly dried and cooled. Absorbing air can reduce the porosity of soap, which go out from the screw-press.

The soap mass is transferred from the vacuum chamber to the lower screw press (9) in granular form. The diameter of this screw is the same as the diameter of the upper screw. The rotation speed may change from 4.85 to 17 rot/ min. The jacket (8) is for cooling the body. The working chamber of the screw is connected to the conical head(10) which provided with heating jacket(11) and thermocontroller(12). The conical head is equipped with a calibration that adjusts the shape of the soap brus, which comes out from the screw-press. The screw of the bottom press is operated via a separate motor through the reducer.

The soap is pressed in the screw-press under pressure and converts into the plastic monolith mass and emerges from the hole of the conical head part in definite shape, as an infinite brus. The productivity of the 2-stage screw press is 1 tonn soap.

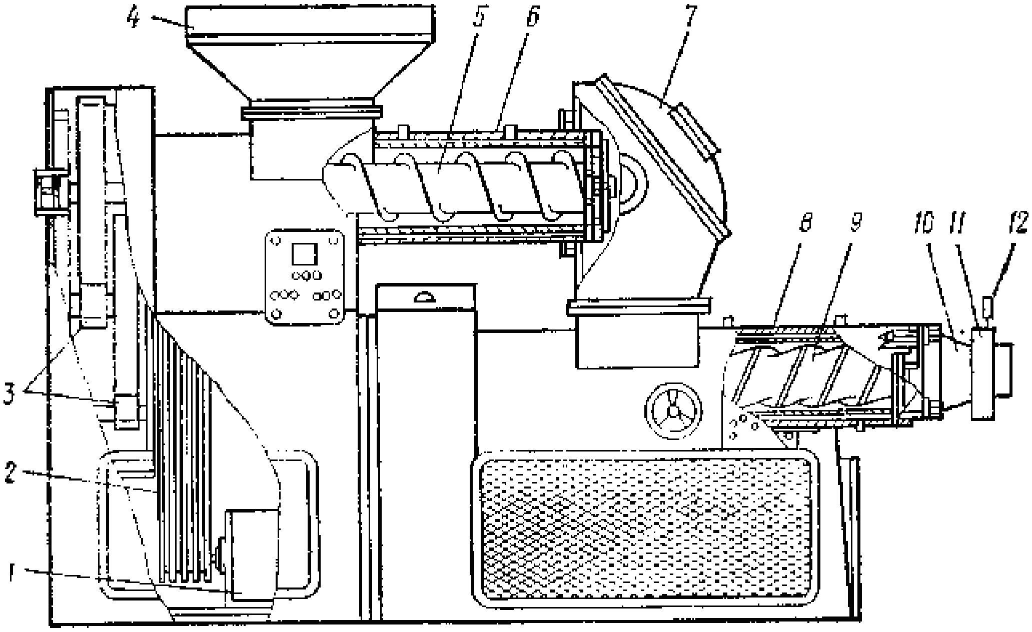

Figure 58. Two-stage vacuum screw-press

Technological scheme of processing of soap base in ELM line (Fig. 59). The base of the aromatic soap is dispensed into the suply container(4), from soap collector(1) via suply pump(2), through filter(3). Then it is pumped to the heat exchanger (6) through the controller pump (6). Here it is heated from 80-85 ^{0}C to 120-160^{0}C. Heated soap falls into a vacuum-drying chamber(7) under pressure of 0.5 MPa and sprinkled through nozzles. The residual pressure in the camera is 15-40 mm. mercury column. Soap clippings fall into secondary screw-press(8), which works under vacuum. Here soap clipping is pressed twice, plastified, dried, squesed out of the grid (panjara) and cut into small pcs (dona) using knives. Soap vermicelli(vermishel) (19) is sent to the bunker.

The steam gas mixture falls into the first cyclone, where the soap powder is separated under the centerescape force and the soap dust is divided at the speed difference, and is lowered into the lower part of the cyclone and removed by means of the screw-press(11). Then steam gas mixture is transferred to the control cyclone and sent to the barometric refrigerator(13). It mix with water at 14-16^{0}C in the refrigerator. The water flows through the barometric pipe (15) into the well. The non-condensed gases and air are adsorbed with vacuum pump(17), through the drop separator (14) and the holder (16).

The soap clippings fall into the mixer screw-press, from container(19) through the gateway shutter(shlyuzli zatvor)(21). There are mixed thoroughly with smell ingredients, dyes, pressed, cut with knife after squesing from grid and formed vermicelli. The vermishel is transmitted to the two-stage vacuum screw-press(23) via the transporter(22). There is a final processing where the four-sided bar are squeezed out.

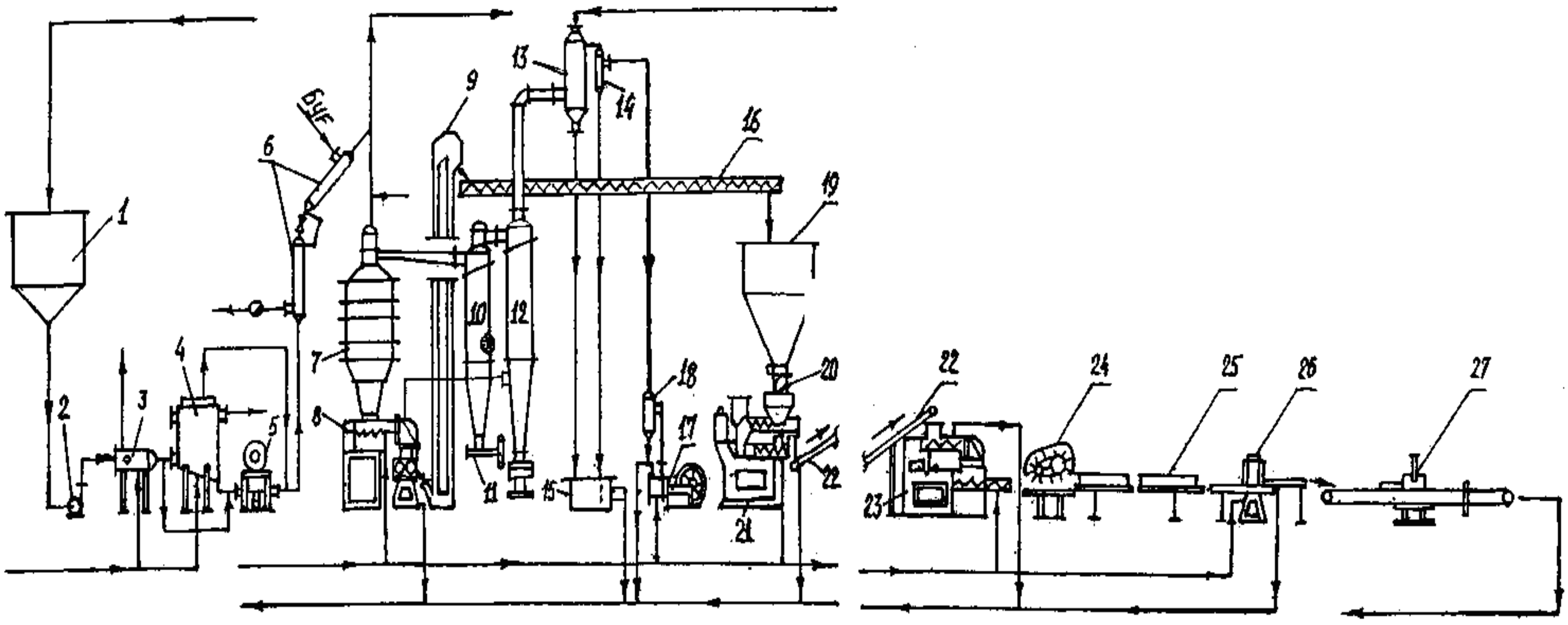

Figure 59 – Technological scheme of processing of soap base in the continuous working ELM line

Then the soap goes to the cutting machine(24) and the soap pieces are dried with hot air in the wind blowing tunnel(25). The solid layer formed on the surface of the soap boosts the clarity of the stamp.

The technological scheme of processing aromatic soap base in the “Matssoni” line (Fig. 60). This device's productivity is 4 t/h, the level of automation and mechanization is high, it allows production of aromatic soap with 80% fatty acids. The presence of condenser which has surface, which cooled with circulated water, ensures non-sewage technology. According to the recipe dosing and mixing of dry and liquid ingredients are performed using a special device. Recycling of wastes (recycled soap, excess product) are mechanized. Air purifier is intended for pneumatic transport. All equipment is made from stainless steel. The technological scheme works as follows:

The soap base, which contain at least 62% fatty acids, at 85-90 °C temperature, dispatched to the tank(4) with permanent level and with capacity of 3.5m^3 , from the soap collector(1), with a pump (2) through the filter (3). The soap base(4) is supplied with aromatizer(11), from tank(5), by gear pump under pressure of 0.6 MPa, through two heat exchangers(6), which are connected. The soap is heated up to 140-145^{0}C temperature, with vapour at 0.6 MPa pressure, in heat exchangers with heat exchange surface 81.4 m^2.

The aromatizer (drying chamber) serves to dry the soap by spraying under vacuum. The residual pressure is 5.03 kPa (40 mm mercury column) in the camera.

The heated soap is sprinkled with the sprayers on the camera walls, crushed with a knife, and fall into the primary two-screw extruder(10) at 34-35^{0}C temperature, and then it pass to the complete extruder(9) through the vacuum-camera, here the soap base is compacted, pressed, plastified, and made squeezed from grid with hole diameter of 12mm.

In order to cool the surface capacitor (16), it is used water with temperature not more than 18 °C, which cooled in the cooling chamber with freon, which exist in the line complex.

The soap vermicelly, from full extruder (9) is supplied to the loading rod (8) which has Venturi pipe and is delivered to the bunker(19), which keeps the cooled soap, through pneumotransmitter(7), through separating cyclone(20).

The air, which has soap dust, go to the sleeve filter (22) with filtering surface of 284 m^2, through the air conductor(21). Cleaning of the filtr is performed automatically, by compressed air with a pressure of 0.5-0.75 MPa. Sparsing of air is generated by air ventilation, for the pneumatic transport system. Purged air is removed to the air through the air conductor(23).

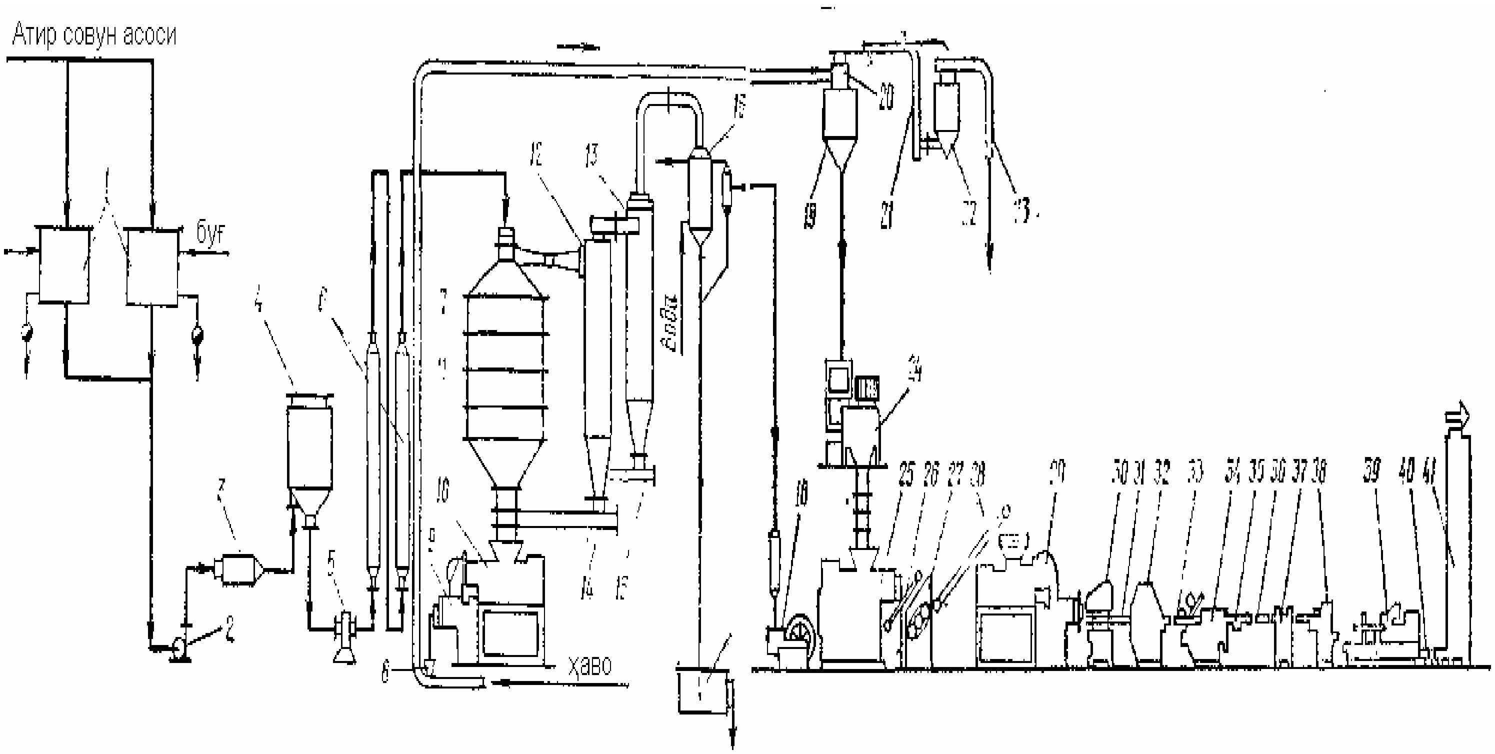

Figure 60. Technological scheme of processing of soap bases on Macconi line

Processing of soap is carried out in two flows, which have productivity of 2t / h. The equipments of these streams can be the same or different. For example, if it is needed to produce two types of soap from the same base of soap, it is selected different equipments for dosing the components in the currents and the various type of methods to process aromatic soap mass.

One of the options recommended by the company soap vermicelli come from the bunker(19) into the BDM mixer(24). Here additional components (odours, colorants, antioxidants, plastifiers, etc.) are added. There are created opportunity of separately dosing of liquid and powdered additives, and mixing them with soap mass, on the BDM line. Liquid ingredients are prepared in reservoirs, which is supplied with heaters (TEN) to maintain temperature at 50-60^{0}C and mixers. The required amount of additives is pumped to the mixer continuously, by using dosing-pumps, soap base is provided to the single screw extruder(25) to be cut.

The soap vermicelli with a diameter of 8 mm, transmitted to the three-roller mill from the extruder(25) through the ribbon carrier(26). There continue cutting to form a "leaf" shape soap. "Leaf" shape soap is delivered to the DUPLEX extruder (29) for the final treatment of soap mass, to mold in a shape brus, through ribbon carrier.

Two soap streams, which come out from the extruder cone are cut into pieces with a cutting machine (30), which has productivity of 200 soaps per minute. Soap pieces are provided to a two-way stamp press (32) by means of the carrier (31). Here, the soaps are formed in a rectangular shape with mass of 100 and 200 g, oval and figure shapes of 150g mass.

The matrix is cooled by a freonized refrigerant with a 55% solution of ethylene glycol to prevent to stick the soap to the surface of the matrix, and to make shiny the surface of the soap. The temperature of the coolant fluid depends on the soap titer and the properties of the additives. For example, for soaps without additives and high-titer, the temperature should be (-10) ÷ (-12^{0}C); for soaps, low-titer and with lubricant additives the temperature should be (-25) ÷ (-30 °C).

After cutting and stamping, the excess and the unwanted soap pieces are returned to the extruder by means of the carrier (29).

The stamped soap pieces are supplied to the wrapping mill (Akma 711) of the Akma company(34), which wraps with one, two and three layers, using two transporters. If the mass of the soap is 100 and 150 g, it is needed three layers of package, for 200g mass soap may require one or two layers of package. The productivity of the machine is 170 ÷ 180 pcs for 100g mass soap, 140 pcs for 150g and 120 pieces for 200g mass soap.

Polyvinylacetate emulsion is used to cover the cracks. In order to accelerate the drying of the attached cracks, the soap pieces come to the heater transporter. The two current of the wrapped soaps are sent to the grouping system (37) by means of the ribbon carrier (36). Here, a single stream is formed and the automatic packing equipment of the company "Akma" (Akma-773-5-2T) (38) puts soap barrels into carton boxes. In a carton, 140 pieces with 100 g of soap, 96 pcs. with 150 g of soap and 108 pcs. with 200 g of soap.

Cardboard boxes, which put soaps (39) are provided to the wrapper machine ("Akma-784-N-TV").

The carton boxes are delivered to the warehouse for finished product, by means of a lifting device(41) and transporter(40).

Quality indicators of household and perfume soap. One of the main indicators of soap quality is the amount of fatty acids. The "number of quality" (S.s) indicator is used to identify the perfection of soap product. The number of quality (S.s) is the amount of fatty acids in the soap. It is determined by the following formula:

$$\text{S.s.} = \frac{m \cdot \ddot{E} \cdot \kappa}{100};$$

where m - the weight of the soap, g;

F.a (Ë.к) - fatty acids,%;

The "number of quality" of 60% household soap in a 400 g weight due to standard, is 240 ± 6 g; this indicator for perfumery soap in a 72% (piece weight is 250 g) equal to 180 ± 4g.

For children soap and I-III group soap in a mass of 100g, quality number is 75±1g., for 80% soap it is equal to 80±1g.

The weight of the soap is corrected to get the quality number of the soap due to the amount of fatty acids

One of the important indicators of soap is the titer of fatty acids. For household soap it is 35-42^{0}C; for perfumery soap it should be 36-41^{0}C. Reduction of the titer increases the solubility and consumption of soap.

The amount of free alkali in the household soap should be up to 0,2 %, in perfumery soap it should be up to 0.1% and the amount of Na_2CO_3 in the household soap should be up to 1.0%, in perfumery soap it should be up to 0.3%. The increase in the amount of free alkaline in the soaps causes drying of skin to and cracking the fabric. The amount of non-saponificated fat and other substances in household soap is 2-3% and in perfumery soap is 1-2%.

The amount of sodium chloride is also limited in perfumery soap, it should not exceed than 0.7%. Otherwise, the plastisity of soap can become worse and form cracks on the surface of the soap.

One of the main indications of soap is its foaming ability in water solution. This indicator is characterized by the height of the foam column formed when mixing 0.5% of soap solution. For household, soap initial volume of the foam, should be 300 ml and for perfume soap,it should be 300-350ml.

Test questions

1. The essence of soap recycling
2. Cooling and drying process of soap
3. Technology of processing of household soap
4. Quality indicators of household and perfumery soap
5. Technological parameters of processing of household soap
6. Technological scheme of processing of household soap
7. Provide brief information on the prcessing of soap and its bringing into commercial condition
8. Technology of processing of perfumery soap
9. Technological parameters of processing of perfumery soap

13-LECTURE
FOOD SURFACTANT PRODUCTION TECHNOLOGY

Plan: Surfactants and their significance. Types of surfactants. Emulsifiers. Obtaining mono - and diglycerides. Production of phospholipid-based emulsifiers.

14-LECTURE

TECHNOLOGIES FOR THE EFFICIENT USE OF BY-PRODUCTS OF FAT AND OIL COMPANIES

Plan: Secondary products of oil and fat enterprises: new innovative technologies for the effective use of waste bleaching soils, tar and other secondary products, new developments proposed and implemented by scientists of the republic. Requirements and proposals for the modernization of industry enterprises.

REFERENCES

BASIC LITERATURE

1.Y. Kadirov, A. Ro'ziboev "Technology of fat processing". Textbook. T. "Science and Technology", Tashkent, 2014, - p 320

2. Arutyunyan N.S., Kornena E.P., Yanova A.I., and others “Technology of processing of fat”. Tutorial 2 e of M.Pischepromizdat-1998-451p

3.Arutyunyan N.S., Kornena E.P., Nesterova E.A., “Refining of oils and fats ". Textbook Sakt-Peterburk.GIORD-2004-288 p.

4.Y. Kadirov. «Technology of fat-and-oil products production», Tashkent, «Sharq», 2007.

ADDITIONAL LITERATURE

1.Manual on the technology of obtaining and processing vegetable oils and fats. / Pod. Editors.A.G.Sergeeva, L.Vuchnoe allowance VNIIZh volume 2-1973.3 kn 1, -1985, book, 2-1977

2. Arutyunyan N.S., Arshiyeva E.A., Yanova L.I., et al. Technology of processing fat. Tutorial-M Agropromizdat-1985-367p

3. Vasilieva GF, "Deodorization in the oil and fat industry" Educational pathology-M .: - 2003-174p

4.Glushenkova A.I., Markman A.A. "Hydrogenation of fats" Educational pathogy-T.: - 1979.-143.

5.Zaytseva L.V., Nechaev A.P. “Fat and oils: modern approaches to the modernization of traditional technologies” Educational manual-M-DeLi plus-2013-152p

6. Y. Kadirov, "Laboratory exercises on the technology of fat processing". Educational manual. T. Cholpon, 2005, p

7.Nechaev A.П., Kochatkova A.A., and others "Mayyonaize" educational manual-M Saint-Petersburg: - 2000-74p

8. Tyutyunnikov B.N. Naumenko P.B., Tovbin I.M. i dr. "Technology of processing of fat" M. Pishprom 1970. Str 650.

9. Rukovodstvo po texnologii polucheniya i prerabotki rastitelny masel i jirov L.V. NIIJ T.II, 1973 c. 350., T. III. 1985, kn 2 1977, p. 351 T. IV 1975, c.544 T. V, 1983

APPENDIXES

GLOSSARY